A-LEVEL MATHS (EDEXCEL 9MA0) · MECHANICS YEAR 1 · CHAPTER 9: CONSTANT ACCELERATION · A* EXAM PRACTICE

Hints online, answers free with an account:
mathswariz.uk/worksheets/a-level-mechanics-year-1-chapter-9-a-star/

Constant acceleration: A* questions

78 marks

Date

© 2026 Mathswariz. All rights reserved. Free for personal and classroom use. Not to be sold or republished.

X A* exam questions

A to A*

Extended Edexcel-style questions. Show every step. The hints are at the end of the sheet. Use one at a time.

X1 A car travels along a straight road from rest at traffic lights P to rest at traffic lights Q, where $PQ = 1000\ \text{m}$. Its acceleration is never more than $2\ \text{m s}^{-2}$ and its deceleration is never more than $4\ \text{m s}^{-2}$. The speed limit on the road is $L\ \text{m s}^{-1}$. The car is modelled as a particle that makes the journey in the least possible time.

(a) Explain, with reference to a velocity–time graph, why in the least time the car accelerates at $2\ \text{m s}^{-2}$ until its speed is $L\ \text{m s}^{-1}$, travels at $L\ \text{m s}^{-1}$, and then decelerates at $4\ \text{m s}^{-2}$. [2 marks]

(b) Given that $L^2 < \dfrac{8000}{3}$, show that the least time is $T = \dfrac{1000}{L} + \dfrac{3L}{8}$ seconds. [4 marks]

© 2026 Mathswariz. All rights reserved. Free for personal and classroom use. Not to be sold or republished.

(c) Find the least time for the journey when $L^2 \geq \frac{8000}{3}$, explaining what happens. [3 marks]

(d) The council wants the least time for the journey to be no more than $60\ \text{s}$. Find the lowest speed limit for which this is possible, giving your answer to 3 significant figures. [4 marks]

Total for X1: 13 marks

© 2026 Mathswariz. All rights reserved. Free for personal and classroom use. Not to be sold or republished.

X2 A ball A is projected vertically upwards with speed $U\ \mathrm{m\,s^{-1}}$ from a point on horizontal ground. At the same instant a ball B is released from rest at a point $40\ \mathrm{m}$ vertically above the point of projection of A. The balls are modelled as particles moving freely under gravity. Show that the balls collide before either reaches the ground if and only if $U > 14$, and find the set of values of U for which A is still rising when they collide. Given that $U = 28$, find the height above the ground at which the balls collide and the speed of each ball just before the collision. [9 marks]

Answer Height $\ldots\ \mathrm{m}$, speeds $\ldots\ \mathrm{m\,s^{-1}}$ and $\ldots\ \mathrm{m\,s^{-1}}$

© 2026 Mathswariz. All rights reserved. Free for personal and classroom use. Not to be sold or republished.

X3 A particle moves along a straight line with constant acceleration $a\ \mathrm{m\ s^{-2}}$. In this question the particle does not change direction unless a part says otherwise.

(a) The particle travels a distance d_1 in a time interval of T seconds, and d_2 in the next T seconds. Show that $d_2 - d_1 = aT^2$. [3 marks]

(b) The distance in a third interval of T seconds is d_3. Hence show that $d_1 + d_3 = 2d_2$. [2 marks]

© 2026 Mathswariz. All rights reserved. Free for personal and classroom use. Not to be sold or republished.

(c) A car moves along a straight road with constant deceleration. In two successive intervals of $4\ \text{s}$ it travels $72\ \text{m}$ and then $40\ \text{m}$. Find its deceleration and its speed at the start of the first interval. [3 marks]

Answer .....

(d) Sam says: "By part (b), in the next $4\ \text{s}$ the car travels $2 \times 40 - 72 = 8\ \text{m}$." The car decelerates at the same rate until it stops, and then stays at rest. Explain why Sam is wrong, and find the distance the car travels in the next $4\ \text{s}$. [4 marks]

Total for X3: 12 marks

© 2026 Mathswariz. All rights reserved. Free for personal and classroom use. Not to be sold or republished.

X4 A balloon rises vertically from rest from a point O on the ground with constant acceleration $1.4\ \mathrm{m\ s^{-2}}$. After $10\ \mathrm{s}$ a small stone is released from the balloon. The stone is modelled as a particle moving freely under gravity, and the balloon keeps the same acceleration after the stone is released.

(a) Find the height of the balloon and its speed when the stone is released. [2 marks]

Answer .....

(b) Find the time from the release of the stone until it hits the ground, and its speed when it does. [4 marks]

Answer .....

© 2026 Mathswariz. All rights reserved. Free for personal and classroom use. Not to be sold or republished.

(c) Find the height of the balloon above the ground at the instant the stone hits the ground. [2 marks]

Answer .....

(d) Find the greatest height above the ground reached by the stone. [2 marks]

Answer .....

(e) Explain why, in practice, the balloon would not keep the same acceleration after the stone is released, and state the effect on your answer to part (c). [2 marks]

Total for X4: 12 marks

© 2026 Mathswariz. All rights reserved. Free for personal and classroom use. Not to be sold or republished.

X5 Two trains move on straight parallel tracks towards each other. Train A is $150\ \text{m}$ long and moves at a constant $24\ \text{m s}^{-1}$. Train B is $90\ \text{m}$ long; at time $t = 0$ it moves at $16\ \text{m s}^{-1}$ and decelerates uniformly at $0.4\ \text{m s}^{-2}$ until it stops at a station, where it stays at rest. At $t = 0$ the fronts of the trains are $1200\ \text{m}$ apart.

(a) Show that the fronts of the trains are level when $t = 100 - 20\sqrt{10}$, and explain why the other root of your equation is rejected. [4 marks]

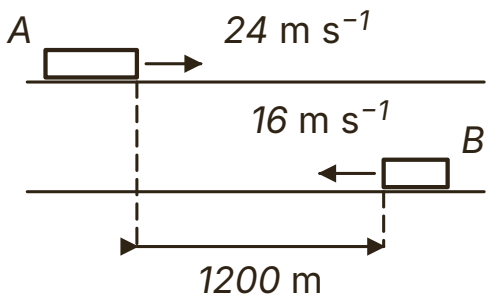

(b) The trains have passed each other completely when the rear of A is level with the rear of B. Ravi solves $24t + 16t - 0.2t^2 = 1440$ and gets $t = 47.1$. Explain why his answer is wrong, and find the correct time. [4 marks]

© 2026 Mathswariz. All rights reserved. Free for personal and classroom use. Not to be sold or republished.

(c) Find the length of time for which some part of each train is alongside the other. [2 marks]

Answer .....

(d) Explain why the trains could not be modelled as particles in this question. [2 marks]

Total for X5: 12 marks

© 2026 Mathswariz. All rights reserved. Free for personal and classroom use. Not to be sold or republished.

X6 A stone is released from rest at the top of a well. The sound of it hitting the water is heard at the top of the well $3.2\ \mathrm{s}$ after it is released. Sound travels at a constant $340\ \mathrm{m\ s^{-1}}$. The stone is modelled as a particle falling freely under gravity. Find the depth of the well. Mo ignores the time the sound takes to travel and finds a depth of $4.9 \times 3.2^2 = 50.176\ \mathrm{m}$. Find the percentage error in Mo's answer, as a percentage of your depth. State, with a reason, whether air resistance on the stone would make the true depth more or less than your answer. [8 marks]

Answer Depth ... m , error ... $\%$

© 2026 Mathswariz. All rights reserved. Free for personal and classroom use. Not to be sold or republished.

X7 A lift rises $45\ \text{m}$ from rest to rest in $20\ \text{s}$. It accelerates uniformly at $1\ \text{m s}^{-2}$ until its speed is $V\ \text{m s}^{-1}$, moves at $V\ \text{m s}^{-1}$, and then decelerates uniformly at $1.5\ \text{m s}^{-2}$ until it stops.

(a) Sketch a velocity–time graph for the motion of the lift. [2 marks]

(b) Show that $V^2 - 24V + 54 = 0$. [4 marks]

(c) Find V, giving a reason for rejecting the other root. [3 marks]

© 2026 Mathswariz. All rights reserved. Free for personal and classroom use. Not to be sold or republished.

(d) Sketch a displacement–time graph for the motion of the lift, describing the shape of each of the three sections and giving the final displacement. [3 marks]

Total for X7: 12 marks

F How did it go?

Colour one circle on each line.

	Not yet	Nearly	Yes
I can use a velocity–time graph to find a least time, with a parameter and a quadratic inequality.	○	○	○
I can tell when a constant acceleration formula stops holding, such as after a particle stops.	○	○	○
I can model two objects under gravity and find the conditions for them to meet in the air.	○	○	○
I can criticise a model, including the particle model and the effect of air resistance.	○	○	○

© 2026 Mathswariz. All rights reserved. Free for personal and classroom use. Not to be sold or republished.

Hints

Use one hint at a time. Cover the ones below it with a sheet of paper.

X1	**Hint 1**	The distance is the area under the velocity–time graph. Think about which shape of graph covers a fixed area in the shortest time.
	Hint 2	Find the time and the distance for speeding up and for slowing down. What is left of the $1000\ \text{m}$ is covered at speed L.
	Hint 3	For (d) solve a quadratic inequality in L, then remember the formula only holds while the car reaches the limit.
X2	**Hint 1**	Write both heights above the ground in terms of t. The $-4.9t^2$ terms are the same, so equal heights gives a simple equation for t.
	Hint 2	The collision must happen before B lands and before A lands. Write each as an inequality in U.
	Hint 3	A is still rising if the collision happens before A reaches its top, at $t = \dfrac{U}{9.8}$.
X3	**Hint 1**	Call the speed at the start u. What is the speed at the start of the second interval?
	Hint 2	Use (a) twice, for intervals 1 and 2, and for intervals 2 and 3.
	Hint 3	For (d), find the car's speed at the end of the second interval and when it stops. Does the car still have the same acceleration for all of the next $4\ \text{s}$?
X4	**Hint 1**	When it is released, the stone has the same velocity as the balloon.
	Hint 2	From the release, the stone starts $70\ \text{m}$ above the ground moving upwards. The ground is below the start, so s is negative.
	Hint 3	The balloon has been accelerating from rest for the whole time: $10\ \text{s}$ plus the time from (b).
X5	**Hint 1**	They move towards each other, so they are level when the sum of the distances they have moved is $1200\ \text{m}$.
	Hint 2	When does B stop? A constant acceleration formula for B only holds up to then.
	Hint 3	For (b), the fronts must first meet and then the trains must pass by their total length: $1200 + 150 + 90 = 1440\ \text{m}$ in all. Check where each train is when B stops.

© 2026 Mathswariz. All rights reserved. Free for personal and classroom use. Not to be sold or republished.

X6

Hint 1 The $3.2\ \text{s}$ is made of two parts: the time the stone falls and the time the sound takes to come back up.

Hint 2 Let the stone fall for t seconds. Write the depth in two ways, once for the stone and once for the sound.

Hint 3 You get a quadratic in t. Only one root is positive.

X7

Hint 1 The time to reach V at $1\ \text{m s}^{-2}$ is V seconds. The time to stop from V at $1.5\ \text{m s}^{-2}$ is $\dfrac{2V}{3}$ seconds.

Hint 2 The distance is the area under the graph: two triangles and a rectangle.

Hint 3 Both roots are positive. Check whether the lift has time to speed up and slow down within $20\ \text{s}$. For (d), the gradient of the displacement–time graph is the velocity.

© 2026 Mathswariz. All rights reserved. Free for personal and classroom use. Not to be sold or republished.