A-LEVEL MATHS (EDEXCEL 9MA0) · MECHANICS YEAR 2 · CHAPTER 6: PROJECTILES · A* EXAM PRACTICE

Hints online, answers free with an account:
mathswariz.uk/worksheets/a-level-mechanics-year-2-chapter-6-a-star/

Projectiles: A* questions

79 marks

Date

© 2026 Mathswariz. All rights reserved. Free for personal and classroom use. Not to be sold or republished.

X A* exam questions

A to A*

Extended Edexcel-style questions. Show every step. The hints are at the end of the sheet. Use one at a time.

X1 A particle is projected from a point O on horizontal ground with speed $U\ \text{m s}^{-1}$ at an angle α above the horizontal. At time t seconds after projection the velocity of the particle is perpendicular to its initial velocity.

(a) Show that $t = \dfrac{U}{g \sin \alpha}$. [4 marks]

(b) Show that at this instant the speed of the particle is $U \cot \alpha$. [3 marks]

© 2026 Mathswariz. All rights reserved. Free for personal and classroom use. Not to be sold or republished.

(c) Find the set of values of α for which this happens no later than the instant the particle lands on the ground. [3 marks]

(d) Given that $U = 30$ and $\tan\alpha = \frac{4}{3}$, find the height of the particle above the ground at this instant. [3 marks]

Answer .....

Total for X1: 13 marks

© 2026 Mathswariz. All rights reserved. Free for personal and classroom use. Not to be sold or republished.

X2 A particle A is held at a point $30\ \mathrm{m}$ vertically above a point C on horizontal ground. A second particle B is on the ground at a point $20\ \mathrm{m}$ from C. At the same instant, A is released from rest and B is projected with speed $U\ \mathrm{m\ s^{-1}}$, aimed directly at the point where A was held. The particles move in the same vertical plane and are modelled as particles moving freely under gravity. Show that B hits A provided that B reaches the vertical line through C before A reaches the ground. Hence find the set of values of U for which the particles collide in the air. [9 marks]

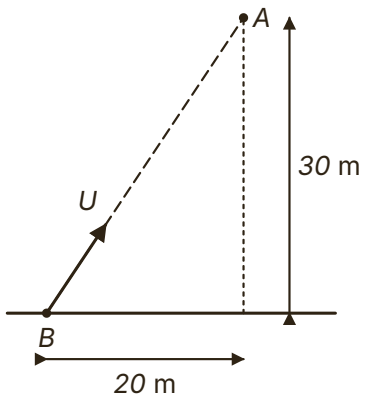

Answer $U > \ldots$

© 2026 Mathswariz. All rights reserved. Free for personal and classroom use. Not to be sold or republished.

X3 A plane is inclined at 30° to the horizontal. A particle is projected from a point O on the plane with speed $U\ \text{m s}^{-1}$ at an angle θ above the horizontal, where $\theta > 30^\circ$. It moves in the vertical plane containing a line of greatest slope and lands at the point A on the plane, up the slope from O.

(a) Show that the time of flight is $\dfrac{2U\sin(\theta - 30^\circ)}{g\cos 30^\circ}$. [4 marks]

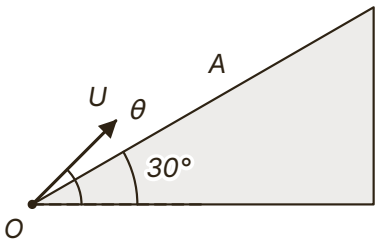

(b) Show that $OA = \dfrac{2U^2\cos\theta\sin(\theta - 30^\circ)}{g\cos^2 30^\circ}$. [2 marks]

© 2026 Mathswariz. All rights reserved. Free for personal and classroom use. Not to be sold or republished.

(c) By writing $2\cos\theta\sin(\theta - 30^\circ)$ as a difference of two sines, find the value of θ for which OA is greatest. Given that $U = 21$, find this greatest distance. [6 marks]

Answer .....

Total for X3: 12 marks

© 2026 Mathswariz. All rights reserved. Free for personal and classroom use. Not to be sold or republished.

X4 A particle is projected from a point O on horizontal ground. It passes through two points that are each $7.5\ \mathrm{m}$ above the ground, at horizontal distances $10\ \mathrm{m}$ and $30\ \mathrm{m}$ from O. Find the angle of projection, the speed of projection and the greatest height of the particle. Show clearly where you use $g = 9.8$. [9 marks]

Answer angle ... , speed ... , greatest height ...

© 2026 Mathswariz. All rights reserved. Free for personal and classroom use. Not to be sold or republished.

X5 A particle is projected from a point O at the top of a vertical cliff, $10\ \text{m}$ above horizontal ground, with speed $14\ \text{m s}^{-1}$ at an angle α above the horizontal, where $0 \leq \alpha < 90°$. It lands on the ground at a horizontal distance x metres from the foot of the cliff.

(a) Show that $\frac{x^2}{40}T^2 - xT + \frac{x^2}{40} - 10 = 0$, where $T = \tan\alpha$. [4 marks]

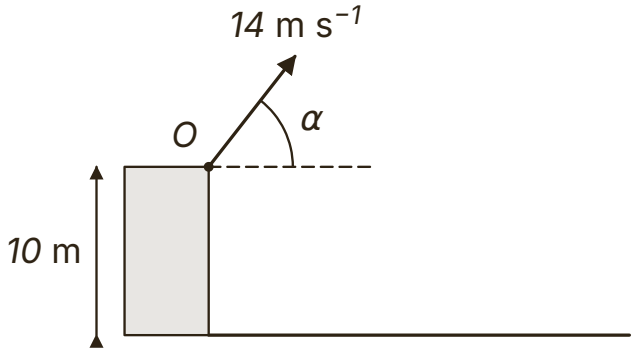

(b) Use your answer to part (a) to find the greatest possible value of x. [4 marks]

Answer .....

© 2026 Mathswariz. All rights reserved. Free for personal and classroom use. Not to be sold or republished.

(c) Find the angle of projection that gives this greatest distance, and find the two angles of projection for which $x = 24$. [4 marks]

Answer .....

Total for X5: 12 marks

X6 A ball is projected from a point O on horizontal ground with speed $25\ \text{m s}^{-1}$ at an angle α above the horizontal, where $\tan\alpha = \frac{3}{4}$. The ball is modelled as a particle moving freely under gravity.

(a) Find the length of time for which the speed of the ball is less than $22\ \text{m s}^{-1}$. [5 marks]

Answer .....

© 2026 Mathswariz. All rights reserved. Free for personal and classroom use. Not to be sold or republished.

(b) Find the horizontal distance travelled by the ball during this time. [2 marks]

Answer .....

(c) Show that the speed of the ball is less than $22\ \mathrm{m\ s^{-1}}$ exactly when the ball is more than h metres above the ground, and find the value of h. [4 marks]

Answer .....

Total for X6: 11 marks

© 2026 Mathswariz. All rights reserved. Free for personal and classroom use. Not to be sold or republished.

X7 A ball is projected from a point O, $2\ \text{m}$ above horizontal ground, with speed $15\ \text{m s}^{-1}$ at an angle α above the horizontal, towards a vertical wall. The foot of the wall is $12\ \text{m}$ horizontally from O, and the wall is high enough that the ball hits it. The ball is modelled as a particle moving freely under gravity.

(a) Show that the ball hits the wall at a height h metres above the ground, where $h = 2 + 12T - 3.136(1 + T^2)$ and $T = \tan\alpha$. [3 marks]

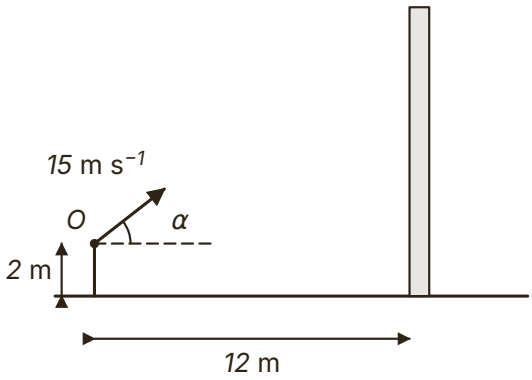

(b) Find the angle of projection for which the ball hits the wall as high as possible, and find this greatest height. [5 marks]

Answer .....

© 2026 Mathswariz. All rights reserved. Free for personal and classroom use. Not to be sold or republished.

(c) For this angle, determine whether the ball is rising or falling when it hits the wall. [3 marks]

Answer .....

(d) Give two ways in which the model could be refined, and state the effect of air resistance on the greatest height in (b). [2 marks]

Total for X7: 13 marks

F How did it go?

Colour one circle on each line.

	Not yet	Nearly	Yes
I can prove general results about a projectile, such as when its velocity is perpendicular to the initial velocity.	○	○	○
I can write the path as a quadratic in tan α and use the discriminant or symmetry to find unknowns.	○	○	○
I can find a greatest distance or height by a trig identity or by differentiation.	○	○	○
I can say how a projectile model could be refined and what effect that would have.	○	○	○

© 2026 Mathswariz. All rights reserved. Free for personal and classroom use. Not to be sold or republished.

Hints

Use one hint at a time. Cover the ones below it with a sheet of paper.

X1	**Hint 1**	Write the velocity at time t as two components. Two directions are perpendicular when their gradients multiply to -1.
	Hint 2	For (b), simplify $U\sin\alpha - \dfrac{U}{\sin\alpha}$ over a common denominator; $1 - \sin^2\alpha = \cos^2\alpha$.
	Hint 3	For (c), the time in (a) must be no more than the time of flight. This gives an inequality in $\sin^2\alpha$.
X2	**Hint 1**	Write the position of each particle at time t. Compare each with where it would be if there were no gravity.
	Hint 2	Without gravity, B would travel along the line to A's starting point while A stayed still. Gravity lowers both by the same amount.
	Hint 3	They meet when B has gone $20\ \text{m}$ horizontally. This must happen before A falls $30\ \text{m}$.
X3	**Hint 1**	Use horizontal and vertical components. The particle is on the plane when $y = x\tan 30°$.
	Hint 2	Multiply through by $\cos 30°$ and look for $\sin\theta\cos 30° - \cos\theta\sin 30°$.
	Hint 3	$2\cos A\sin B = \sin(A+B) - \sin(A-B)$. Only one term depends on θ.
X4	**Hint 1**	Two points at the same height are the same distance either side of the highest point.
	Hint 2	So you know where the particle lands. Write the path as $y = x\tan\alpha\left(1 - \dfrac{x}{R}\right)$, or use the path equation at $x = 10$ and $x = 30$.
	Hint 3	One equation gives $\tan\alpha$. The other gives U^2.
X5	**Hint 1**	Write the equation of the path with $\dfrac{1}{\cos^2\alpha} = 1 + \tan^2\alpha$, and put $y = -10$.
	Hint 2	For a given x, the equation is a quadratic in T. A real angle needs real roots.
	Hint 3	At the greatest x the two roots are equal, so $T = -\dfrac{b}{2a}$.

© 2026 Mathswariz. All rights reserved. Free for personal and classroom use. Not to be sold or republished.

X6

Hint 1 Write the speed squared at time t. The horizontal part does not change.

Hint 2 $(15 - 9.8t)^2 < 84$ gives an interval of values of t, not one value.

Hint 3 For (c), use $v_y^2 = u_y^2 - 2gs$ to write the speed squared in terms of the height, not the time.

X7

Hint 1 Use the equation of the path with $x = 12$, and remember O is $2\ \text{m}$ above the ground.

Hint 2 h is a quadratic in T. Differentiate with respect to T, or complete the square.

Hint 3 Find the time to reach the wall from the horizontal motion, then the sign of v_y at that time.

© 2026 Mathswariz. All rights reserved. Free for personal and classroom use. Not to be sold or republished.