A-LEVEL MATHS (EDEXCEL 9MA0) · MECHANICS YEAR 2 · CHAPTER 7: APPLICATIONS OF FORCES · A* EXAM PRACTICE

Hints online, answers free with an account:
mathswariz.uk/worksheets/a-level-mechanics-year-2-chapter-7-a-star/

# Applications of forces: A* questions

104 marks

Date


© 2026 Mathswariz. All rights reserved. Free for personal and classroom use. Not to be sold or republished.

## X A* exam questions

A to A*

Extended Edexcel-style questions. Show every step. The hints are at the end of the sheet. Use one at a time.

**X1** A uniform rod $AB$, of length $2\ \text{m}$ and mass $4\ \text{kg}$, rests horizontally with its end $A$ against a rough vertical wall. The rod is perpendicular to the wall. A light inextensible string joins $B$ to the point $C$ on the wall vertically above $A$, where $AC = 1.5\ \text{m}$. A particle $P$ of mass $2\ \text{kg}$ is placed on the rod at a distance $x$ metres from $A$. The coefficient of friction between the rod and the wall is $0.5$. The rod and the string lie in a vertical plane perpendicular to the wall, and the rod rests in equilibrium. Find the set of possible values of $x$. [9 marks]

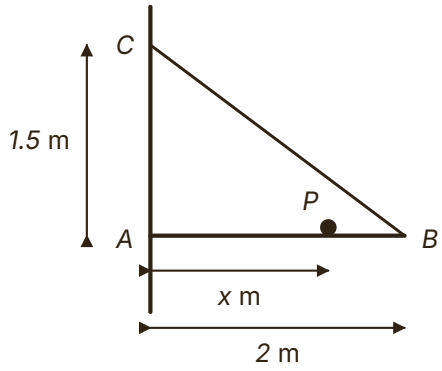


Answer $\cdots \leqslant x \leqslant \ldots$


© 2026 Mathswariz. All rights reserved. Free for personal and classroom use. Not to be sold or republished.

**X2** A uniform rod $AB$, of length $4a$ and weight $W$, rests with $A$ on rough horizontal ground and with the rod resting on a small rough peg $C$, where $AC = 3a$. The rod is in a vertical plane perpendicular to the peg and makes an angle $\theta$ with the ground, where $\tan\theta = \frac{3}{4}$. The coefficient of friction between the rod and the ground and between the rod and the peg is $\mu$. The rod is in limiting equilibrium, with $A$ on the point of slipping away from the peg.

**(a)** Show that the normal reaction at the peg has magnitude $\dfrac{8W}{15}$. [3 marks]

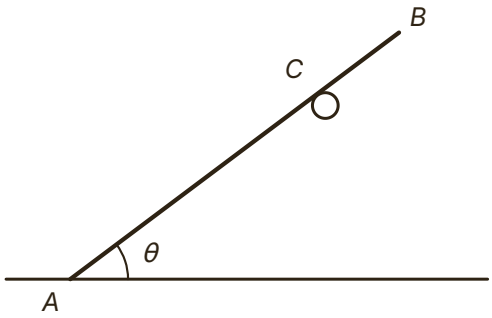



© 2026 Mathswariz. All rights reserved. Free for personal and classroom use. Not to be sold or republished.

**(b)** Show that $24\mu^2 - 75\mu + 24 = 0$. [5 marks]

**(c)** Hence find the value of $\mu$, giving a reason for rejecting the other root. [3 marks]

**Total for X2: 11 marks**


© 2026 Mathswariz. All rights reserved. Free for personal and classroom use. Not to be sold or republished.

**X3** A box of mass $8\ \text{kg}$ is at rest on rough horizontal ground. The coefficient of friction between the box and the ground is $0.75$. A rope is attached to the box and pulled with a force of $50\ \text{N}$ at an angle $\theta$ above the horizontal, where $0° \leqslant \theta < 90°$. The box is modelled as a particle and the rope as light.

**(a)** Show that, if the box moves, its acceleration $a\ \text{m s}^{-2}$ satisfies $8a = 62.5\cos(\theta - \alpha) - 58.8$, where $\tan\alpha = 0.75$. [5 marks]

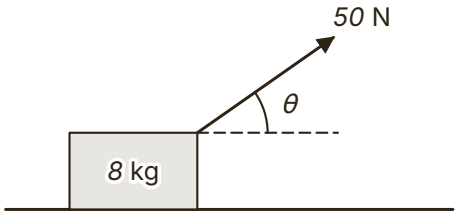


**(b)** Find the set of values of $\theta$ for which the box moves. [4 marks]

Answer .....


© 2026 Mathswariz. All rights reserved. Free for personal and classroom use. Not to be sold or republished.

**(c)** Find the greatest possible acceleration of the box, and the value of $\theta$ that gives it. [2 marks]

Answer .....

**(d)** The box is pulled from rest with $\theta = 30^\circ$ for $4$ s. The rope is then released. Find the total distance moved by the box. [5 marks]

Answer .....

**Total for X3: 16 marks**


© 2026 Mathswariz. All rights reserved. Free for personal and classroom use. Not to be sold or republished.

**X4** A rough horizontal table top meets, at its edge $E$, a rough plane inclined at an angle $\alpha$ to the horizontal, where $\tan\alpha = \frac{3}{4}$. The plane slopes down from $E$ to horizontal ground. A small smooth pulley is fixed at $E$. A particle $P$ of mass $3\ \text{kg}$ is on the table, $4\ \text{m}$ from $E$. It is joined by a light inextensible string, which passes over the pulley, to a particle $Q$ of mass $4\ \text{kg}$ on the inclined plane. $Q$ is $2\ \text{m}$ from the bottom of the plane, measured along a line of greatest slope. The string lies along the table perpendicular to the edge and along a line of greatest slope of the plane. The coefficient of friction is $0.2$ between $P$ and the table and $0.25$ between $Q$ and the plane. The system is released from rest.

**(a)** Show that the acceleration of the system is $\frac{g}{7}$, and find the tension in the string. [6 marks]

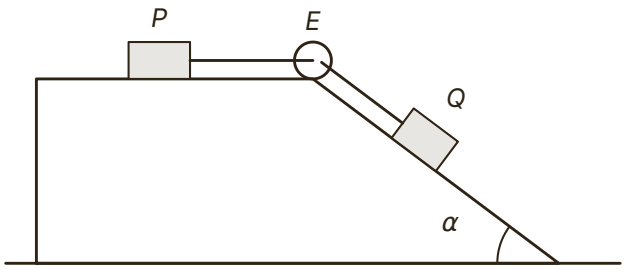



© 2026 Mathswariz. All rights reserved. Free for personal and classroom use. Not to be sold or republished.

**(b)** Find the magnitude of the force exerted on the pulley by the string, and the angle that this force makes with the vertical. [4 marks]

Answer .....

**(c)** When $Q$ reaches the bottom of the plane it comes to rest and does not move again. Show that $P$ does not reach the pulley, and find the time from release until $P$ comes to rest. [5 marks]


© 2026 Mathswariz. All rights reserved. Free for personal and classroom use. Not to be sold or republished.

**(d)** State how you used, in your working, the fact that the string is light and the fact that it is inextensible. [2 marks]

**Total for X4: 17 marks**

---

**X5** A particle moves on a line of greatest slope of a rough plane inclined at an angle $\alpha$ to the horizontal. The coefficient of friction between the particle and the plane is $\mu$. In a first experiment, the particle is released from rest and slides $4.4\ \text{m}$ down the plane in $2\ \text{s}$. In a second experiment, the particle is projected up the plane from a point $O$ with speed $3.8\ \text{m s}^{-1}$ and comes to instantaneous rest $0.5\ \text{s}$ later.

**(a)** Find the value of $\alpha$ and the value of $\mu$. [7 marks]

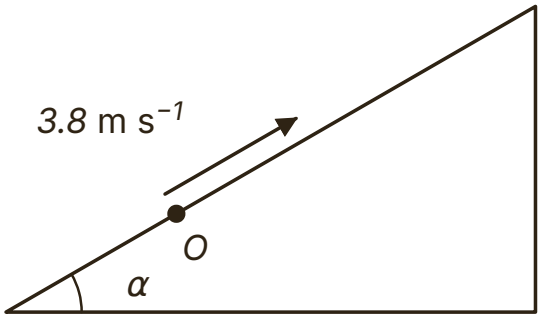



© 2026 Mathswariz. All rights reserved. Free for personal and classroom use. Not to be sold or republished.

**(b)** In the second experiment the particle then slides back down. Find its speed as it passes $O$, and the total time from projection until it passes $O$. [4 marks]

Answer .....

**(c)** When the second experiment is carried out, the measured speed as the particle passes $O$ is less than the answer to part (b). Suggest one refinement to the model, and explain why it would make the speed smaller. [2 marks]

**Total for X5: 13 marks**


© 2026 Mathswariz. All rights reserved. Free for personal and classroom use. Not to be sold or republished.

**X6** A uniform ladder $AB$, of length $2a$ and weight $W$, rests with its foot $A$ on rough horizontal ground and its top $B$ against a rough vertical wall. The ladder is in a vertical plane perpendicular to the wall and makes an angle $\theta$ with the ground. The coefficient of friction is $\mu$ between the ladder and the ground and $\mu'$ between the ladder and the wall.

**(a)** Show that, when the ladder is on the point of slipping, $\tan\theta = \dfrac{1-\mu\mu'}{2\mu}$. [6 marks]

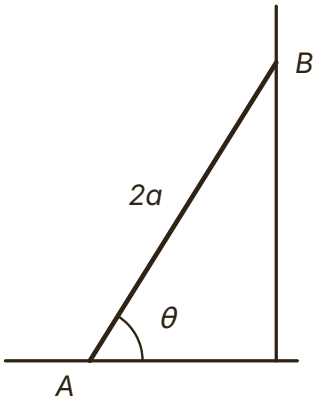



© 2026 Mathswariz. All rights reserved. Free for personal and classroom use. Not to be sold or republished.

**(b)** Given that $\mu = 0.3$ and $\mu' = 0.4$, find the smallest angle $\theta$ at which the ladder can rest in equilibrium. [2 marks]

Answer .....

**(c)** Explain what the result in part (a) tells you when $\mu\mu' \geqslant 1$. [2 marks]

**(d)** Ali models the wall as smooth, keeping $\mu = 0.3$. Find the smallest angle in Ali's model, and state with a reason which of the two models gives the safer advice for using the ladder. [3 marks]

**Total for X6: 13 marks**


© 2026 Mathswariz. All rights reserved. Free for personal and classroom use. Not to be sold or republished.

**X7** A uniform rod $AB$, of length $2\ \mathrm{m}$ and mass $5\ \mathrm{kg}$, is freely hinged at $A$ to a fixed vertical wall. A light inextensible string joins $B$ to the point $C$ on the wall vertically above $A$, where $AC = 2\ \mathrm{m}$. A particle of mass $m\ \mathrm{kg}$ hangs from $B$. The rod rests in a vertical plane perpendicular to the wall, with $AB$ at $30^\circ$ above the horizontal. The string breaks if the tension in it is greater than $98\ \mathrm{N}$. Find the greatest possible value of $m$. For this value of $m$, find the magnitude of the force exerted on the rod at the hinge, and the angle that this force makes with the horizontal. [11 marks]

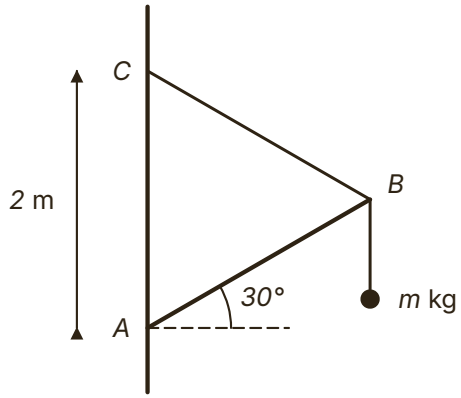


Answer $m = \ldots$ ; hinge force $\ldots$ N at $\ldots$ to the horizontal


© 2026 Mathswariz. All rights reserved. Free for personal and classroom use. Not to be sold or republished.

**X8** Two particles $A$ and $B$, of masses $2\ \text{kg}$ and $3\ \text{kg}$, are joined by a light rigid rod. They rest on a rough plane inclined at an angle $\alpha$ to the horizontal, with the rod along a line of greatest slope and $A$ higher up the plane than $B$. The coefficient of friction is $0.5$ between $A$ and the plane and $0.2$ between $B$ and the plane. The angle $\alpha$ is increased slowly until the particles are on the point of slipping.

**(a)** Show that, at this point, $\tan\alpha = 0.32$. [4 marks]

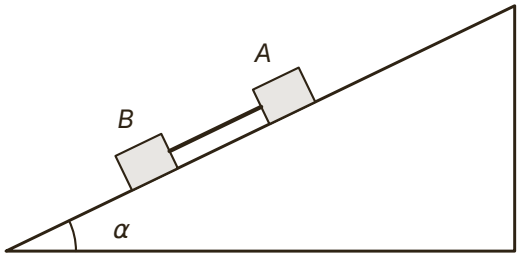


**(b)** Find the force in the rod, stating whether it is a tension or a thrust. [4 marks]


© 2026 Mathswariz. All rights reserved. Free for personal and classroom use. Not to be sold or republished.

**(c)** The particles are now placed the other way round, with $B$ higher up the plane than $A$, and joined by a light inextensible string instead of the rod. The plane is still at this angle $\alpha$. Explain why the string is slack, and find the acceleration of each particle. [4 marks]

**(d)** Instead, with $B$ higher up the plane than $A$, the particles are joined by the rod. State whether the rod is in tension or thrust when they are on the point of slipping, and give the magnitude of the force. [2 marks]

**Total for X8: 14 marks**


© 2026 Mathswariz. All rights reserved. Free for personal and classroom use. Not to be sold or republished.

## F How did it go?

Colour one circle on each line.

| | Not yet | Nearly | Yes |
|---|---|---|---|
| I can use $F \leq \mu R$ to find a range of positions, forces or angles, and decide which way friction acts from my working. | ○ | ○ | ○ |
| I can take moments about a well chosen point for rods on pegs, walls and hinges, using perpendicular distances. | ○ | ○ | ○ |
| I can find unknown angles and coefficients of friction from equations of motion, including two-stage motion. | ○ | ○ | ○ |
| I can solve connected particle problems on rough surfaces, including the force on a pulley and a string that goes slack. | ○ | ○ | ○ |


© 2026 Mathswariz. All rights reserved. Free for personal and classroom use. Not to be sold or republished.

# Hints

Use one hint at a time. Cover the ones below it with a sheet of paper.

**X1**

**Hint 1** Take moments about $A$. The friction and the normal reaction at the wall both act at $A$, so they have no moment about $A$.

**Hint 2** Resolve horizontally and vertically to write $R$ and $F$ in terms of $x$. Work out the sign of $F$ to see which way the friction acts.

**Hint 3** Use $F \leqslant \mu R$ and solve the inequality. Remember that $P$ is on the rod.

**X2**

**Hint 1** The friction at the peg acts along the rod. Which point does the line of the rod pass through?

**Hint 2** $A$ moves away from the peg, so the rod slides down over the peg. Friction opposes the motion at each contact: towards the peg at $A$, and up the rod at $C$.

**Hint 3** Resolve horizontally and vertically. Substitute $S$ and eliminate $R$. A root that makes a normal reaction negative is not possible.

**X3**

**Hint 1** The pull has an upward component, so the normal reaction is not $8g$. Write $R$ in terms of $\theta$ first.

**Hint 2** The box moves when the right-hand side of the equation in part (a) is positive. Solve the inequality for $\theta - \alpha$, then for $\theta$.

**Hint 3** When the rope is released, the normal reaction changes back to $8g$, so the friction changes too.

**X4**

**Hint 1** $Q$ is on the plane, so its normal reaction is $4g\cos\alpha$. Write one equation of motion for $P$ and one for $Q$, then add them.

**Hint 2** The two parts of the string pull on the pulley. Add them as vectors: one horizontal, one down the plane.

**Hint 3** After $Q$ stops, the string is slack and only friction acts on $P$ along the table.

**X5**

**Hint 1** Use $s = ut + \frac{1}{2}at^2$ and $v = u + at$ to find the two accelerations.

**Hint 2** Friction acts up the plane in the first experiment and down the plane in the second. Write both equations of motion. Add and subtract them.

**Hint 3** Check that the particle does slide back: compare $\tan\alpha$ with $\mu$.


© 2026 Mathswariz. All rights reserved. Free for personal and classroom use. Not to be sold or republished.

**X6**

**Hint 1** Both frictions are limiting. The foot slides away from the wall and the top slides down the wall.

**Hint 2** Resolve in two directions, then take moments about $A$. The friction at $B$ has a moment about $A$.

**Hint 3** Write $S$ and $W$ in terms of $R$ and divide through by $R$.

**X7**

**Hint 1** Look at triangle $ABC$: two sides are $2\ \mathrm{m}$ and the angle at $A$ is $60^\circ$. Use it to find the perpendicular distance from $A$ to the string.

**Hint 2** Take moments about $A$ to get $T$ in terms of $m$, then use $T \leqslant 98$.

**Hint 3** The hinge force is unknown in size and direction. Give it a horizontal and a vertical component and resolve.

**X8**

**Hint 1** Treat the two particles as one system: the force in the rod does not appear. Both frictions are limiting.

**Hint 2** To find the force in the rod, write an equation for one particle on its own.

**Hint 3** Compare $\tan\alpha$ with each coefficient of friction to see which particle would slide on its own.


© 2026 Mathswariz. All rights reserved. Free for personal and classroom use. Not to be sold or republished.