Connected particles

127 marks

Hints online, answers free with an account: mathswariz.uk/worksheets/a-level-mechanics-year-2-connected-particles/

Date

© 2026 Mathswariz. All rights reserved. Free for personal and classroom use. Not to be sold or republished.

A Do Now

Quick questions to start. Some use earlier lessons; some set a slip that costs marks.

A1 Needed today [2 marks]

A particle is released from rest on a rough plane inclined at 24° to the horizontal. The coefficient of friction is 0.3. Find the acceleration of the particle.

Answer .....

A2 Needed today [3 marks]

A particle P of mass $3\ \text{kg}$ lies on a smooth horizontal table. It is joined by a light inextensible string, passing over a smooth pulley at the edge of the table, to a particle Q of mass $2\ \text{kg}$ hanging freely. The system is released from rest. Find the acceleration and the tension in the string.

Answer .....

© 2026 Mathswariz. All rights reserved. Free for personal and classroom use. Not to be sold or republished.

A3 Needed today [2 marks]

Two forces, each of magnitude $20\ \mathrm{N}$, act at a point. The angle between them is 70°. Find the magnitude of their resultant.

Answer .....

A4 Common slip [3 marks]

A particle P of mass $4\ \mathrm{kg}$ is on a smooth plane inclined at 30°. It is joined by a light string over a smooth pulley at the top of the plane to a particle Q of mass $6\ \mathrm{kg}$ hanging freely. Kit writes for Q: "$6g - 4g\sin 30^\circ = 6a$". Explain Kit's mistake and find the acceleration.

Answer .....

A5 Common slip [2 marks]

Two particles are joined by a light inextensible string passing over a smooth pulley. Say what each of the words "inextensible" and "smooth" tells you when you write the equations of motion.

© 2026 Mathswariz. All rights reserved. Free for personal and classroom use. Not to be sold or republished.

Your teacher works through each example with you. Then try the one beside it.

EXAMPLE 1

A particle P of mass $4\ \text{kg}$ is on a rough plane inclined at α to the horizontal, where $\tan\alpha = \dfrac{5}{12}$. It is joined by a light inextensible string, passing over a small smooth pulley at the top of the plane, to a particle Q of mass $3\ \text{kg}$ hanging freely. The string from P to the pulley lies along a line of greatest slope. The coefficient of friction between P and the plane is 0.25. The system is released from rest. Find the acceleration of the system and the tension in the string.

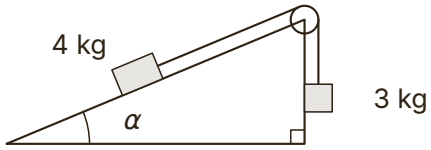

Hint Write one equation for Q (down positive) and one for P (up the plane positive). P moves up, so friction on P acts down the plane.

B1 A particle P of mass $5\ \text{kg}$ is on a rough plane inclined at $30°$ to the horizontal, joined by a light inextensible string over a smooth pulley at the top of the plane to a particle Q of mass $6\ \text{kg}$ hanging freely. The coefficient of friction between P and the plane is 0.2. The system is released from rest. Find the acceleration and the tension. [5 marks]

Answer .....

© 2026 Mathswariz. All rights reserved. Free for personal and classroom use. Not to be sold or republished.

EXAMPLE 2

A particle P of mass $3\ \text{kg}$ is on a smooth plane inclined at 40° to the horizontal. It is joined by a light inextensible string, passing over a small smooth pulley at the top of the plane, to a particle Q of mass $4\ \text{kg}$ hanging freely. The system is released from rest. Find the tension in the string, and the magnitude and direction of the force exerted on the pulley by the string.

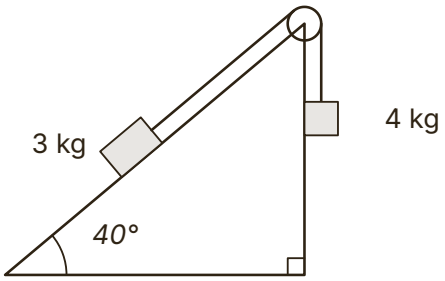

Hint The two parts of the string pull on the pulley with equal tensions. One part points down the slope, the other straight down. Find the angle between them.

B2 A particle P of mass $2\ \text{kg}$ is on a rough plane inclined at 30° to the horizontal, joined by a light inextensible string over a small smooth pulley at the top of the plane to a particle Q of mass $5\ \text{kg}$ hanging freely. The coefficient of friction between P and the plane is 0.25. The system is released from rest. Find the tension in the string and the magnitude and direction of the force exerted on the pulley by the string. [6 marks]

© 2026 Mathswariz. All rights reserved. Free for personal and classroom use. Not to be sold or republished.

Answer .....

EXAMPLE 3

A particle P of mass $6\ \text{kg}$ is on a rough plane inclined at $25°$ to the horizontal. It is joined by a light inextensible string, over a smooth pulley at the top of the plane, to a particle Q of mass $5\ \text{kg}$ hanging freely. The system is released from rest and Q falls $1.2\ \text{m}$ in $1.5\ \text{s}$. Find the tension in the string and the coefficient of friction between P and the plane.

Hint Find a from the motion of Q first. Then the equation for Q gives T, and the equation for P gives μ.

B3 [5 marks]

A particle P of mass $4\ \text{kg}$ is on a rough plane inclined at $35°$, joined by a light inextensible string over a smooth pulley at the top of the plane to a particle Q of mass $4\ \text{kg}$ hanging freely. The system is released from rest and Q falls $2\ \text{m}$ in $2\ \text{s}$. Find the tension in the string and the coefficient of friction between P and the plane.

Answer .....

© 2026 Mathswariz. All rights reserved. Free for personal and classroom use. Not to be sold or republished.

EXAMPLE 4

A particle P of mass $3\ \text{kg}$ is on a rough plane inclined at $30°$, $2\ \text{m}$ from a small smooth pulley at the top of the plane. A light inextensible string from P passes over the pulley to a particle Q of mass $5\ \text{kg}$, which hangs $1\ \text{m}$ above the ground. The coefficient of friction between P and the plane is 0.2. The system is released from rest. Q hits the ground and does not rebound. Find the further distance P moves up the plane, show that P does not reach the pulley, and decide whether P then slides back down.

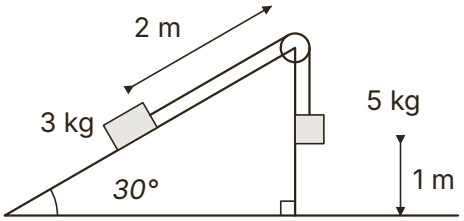

Hint Stage 1: both particles move together. Stage 2: once Q is on the ground the string is slack, so P has no tension and friction and the weight component both act down the plane.

B4 [7 marks]

A particle P of mass $2\ \text{kg}$ is on a rough plane inclined at $20°$, $3\ \text{m}$ from a small smooth pulley at the top of the plane. A light inextensible string from P passes over the pulley to a particle Q of mass $4\ \text{kg}$, which hangs $1.5\ \text{m}$ above the ground. The coefficient of friction between P and the plane is 0.4. The system is released from rest and Q hits the ground without rebounding. Find the total distance P moves up the plane, and state whether P then stays at rest.

© 2026 Mathswariz. All rights reserved. Free for personal and classroom use. Not to be sold or republished.

Answer .....

© 2026 Mathswariz. All rights reserved. Free for personal and classroom use. Not to be sold or republished.

EXAMPLE 5

A car of mass $1200\ \text{kg}$ tows a trailer of mass $400\ \text{kg}$ up a straight road inclined at α to the horizontal, where $\sin\alpha = \frac{1}{20}$. The tow bar is light and parallel to the road. The engine of the car gives a driving force of $3000\ \text{N}$. The resistances to motion are $400\ \text{N}$ on the car and $200\ \text{N}$ on the trailer. Find the acceleration and the tension in the tow bar. When the speed is $12\ \text{m s}^{-1}$ the tow bar breaks. Find the distance the trailer then moves up the road before it comes to rest.

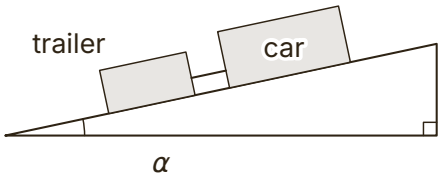

Hint Whole system for a, then the trailer alone for T. After the tow bar breaks, the trailer has no tension: only its resistance and its weight component act, both down the road.

B5 A van of mass $1500\ \text{kg}$ tows a trailer of mass $500\ \text{kg}$ up a straight road inclined at α, where $\sin\alpha = \frac{1}{25}$, using a light tow bar parallel to the road. The driving force is $4200\ \text{N}$, and the resistances are $500\ \text{N}$ on the van and $300\ \text{N}$ on the trailer. Find the acceleration and the tension in the tow bar. When the speed is $15\ \text{m s}^{-1}$ the tow bar breaks. Find the time the trailer then takes to come to rest. [6 marks]

© 2026 Mathswariz. All rights reserved. Free for personal and classroom use. Not to be sold or republished.

Answer

C Practice

A-Level

C1 A particle P of mass $3\ \text{kg}$ on a rough plane inclined at $35°$ is joined by a light string over a smooth pulley at the top to a particle Q of mass $4\ \text{kg}$ hanging freely. The coefficient of friction is 0.25. Lena writes "$F = 0.25 \times 3g = 7.35$" and gets $a = 2.14\ \text{m s}^{-2}$. Explain Lena's mistake and find the correct acceleration and tension. [4 marks]

Answer

© 2026 Mathswariz. All rights reserved. Free for personal and classroom use. Not to be sold or republished.

C2 A particle P of mass $5\ \text{kg}$ on a rough plane inclined at $40°$ is joined by a light string over a smooth pulley at the top to a particle Q of mass $1.5\ \text{kg}$ hanging freely. The coefficient of friction is 0.2. When released, P slides down the plane. Dev writes "$5g\sin 40° + F - 1.5g = 6.5a$" and gets $a = 3.74\ \text{m s}^{-2}$. Explain Dev's mistake and find the correct acceleration and tension. [5 marks]

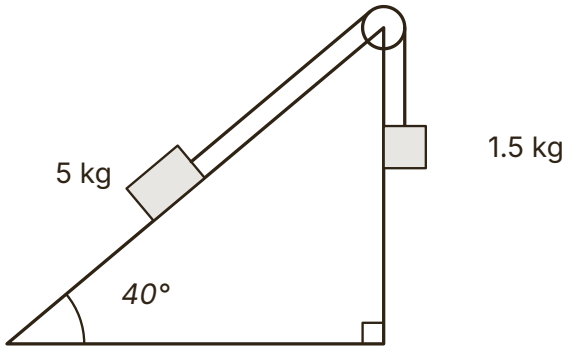

Answer .....

© 2026 Mathswariz. All rights reserved. Free for personal and classroom use. Not to be sold or republished.

C3 A string passes over a small smooth pulley at the top of a plane inclined at $35°$. One part of the string lies along a line of greatest slope and the other hangs vertically. The tension in the string is $20\ \text{N}$. Ana says the force on the pulley is $20 + 20 = 40\ \text{N}$. Ben says it is $\sqrt{20^2 + 20^2} = 28.3\ \text{N}$. Explain why both are wrong, and find the magnitude and direction of the force. [4 marks]

Answer .....

© 2026 Mathswariz. All rights reserved. Free for personal and classroom use. Not to be sold or republished.

C4 A particle P of mass $2\ \text{kg}$ is pulled up a rough plane inclined at $25°$ by a light string which passes over a pulley to a falling weight. The coefficient of friction is 0.3. When P is moving at $4\ \text{m s}^{-1}$ the string breaks. Mo says "P keeps the same acceleration as before, so it keeps speeding up the slope." Explain Mo's mistake. Find how much further P moves up the plane, and state what happens to P after that. [5 marks]

Answer .....

© 2026 Mathswariz. All rights reserved. Free for personal and classroom use. Not to be sold or republished.

C5 A particle P of mass $3\ \text{kg}$ is on a smooth plane inclined at $30°$, joined by a light inextensible string over a smooth pulley at the top to a particle Q of mass $4\ \text{kg}$ hanging freely. The system is released from rest. Zara says "the tension is the weight of Q, so $T = 4g = 39.2\ \text{N}$." Explain why Zara is wrong and find the tension. [4 marks]

Answer .....

© 2026 Mathswariz. All rights reserved. Free for personal and classroom use. Not to be sold or republished.

D1 A particle P of mass $4\ \text{kg}$ is on a rough plane inclined at α to the horizontal, where $\tan\alpha = \frac{3}{4}$. P is $2.5\ \text{m}$ from a small smooth pulley at the top of the plane. A light inextensible string from P lies along a line of greatest slope, passes over the pulley, and is attached to a particle Q of mass $6\ \text{kg}$ which hangs $1.5\ \text{m}$ above the ground. The coefficient of friction between P and the plane is 0.25. The system is released from rest.

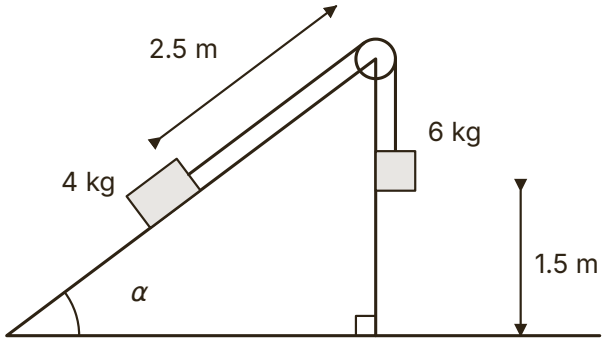

(a) Show that the acceleration of Q is $0.28g$. [3 marks]

Answer .....

(b) Find the tension in the string. [2 marks]

Answer .....

© 2026 Mathswariz. All rights reserved. Free for personal and classroom use. Not to be sold or republished.

(c) Find the magnitude and direction of the force exerted on the pulley by the string. [4 marks]

Answer .....

(d) Q hits the ground and does not rebound. Show that P does not reach the pulley. [4 marks]

Answer .....

Total for D1: 13 marks

© 2026 Mathswariz. All rights reserved. Free for personal and classroom use. Not to be sold or republished.

D2

Two planes, each rough, meet at a ridge where there is a small smooth pulley. One plane is inclined at $30°$ and the other at $50°$ to the horizontal. A particle P of mass $2\ \text{kg}$ on the $30°$ plane is joined to a particle Q of mass $4\ \text{kg}$ on the $50°$ plane by a light inextensible string over the pulley; each part of the string lies along a line of greatest slope. The coefficient of friction for each particle is 0.3. The system is released from rest and Q moves down its plane. Noor writes for the whole system: "$4g - 2g - 0.3(2g\cos 30° + 4g\cos 50°) = 6a$, so $a = 1.16\ \text{m s}^{-2}$."

Noor's acceleration is wrong.

(a) Explain Noor's error, and find the correct acceleration. [4 marks]

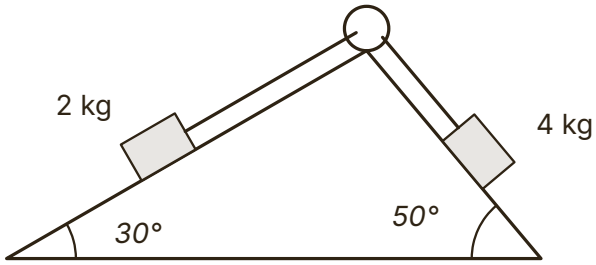

Answer .....

© 2026 Mathswariz. All rights reserved. Free for personal and classroom use. Not to be sold or republished.

(b) Find the tension in the string. [2 marks]

Answer .....

(c) Find the magnitude of the force exerted on the pulley by the string, and the angle it makes with the vertical. [4 marks]

Answer .....

Total for D2: 10 marks

© 2026 Mathswariz. All rights reserved. Free for personal and classroom use. Not to be sold or republished.

D3 Two crates A and B, of masses $4\ \text{kg}$ and $6\ \text{kg}$, are on rough horizontal ground, with A behind B. They are joined by a light inextensible rope, which is horizontal. A force of magnitude $60\ \text{N}$ acts on B at 30° above the horizontal, in the vertical plane containing the rope, and the crates move forward. The coefficient of friction between each crate and the ground is 0.3. The crates are modelled as particles. Find the acceleration of the crates and the tension in the rope. [8 marks]

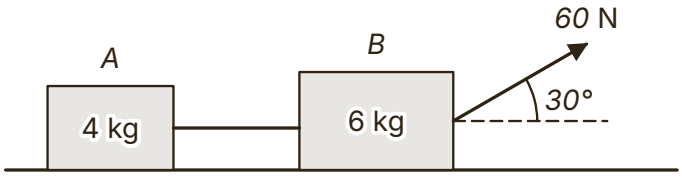

Answer .....

© 2026 Mathswariz. All rights reserved. Free for personal and classroom use. Not to be sold or republished.

D4 A particle P of mass $3\ \text{kg}$ is on a rough plane inclined at 25° to the horizontal. It is joined by a light inextensible string, over a small smooth pulley at the top of the plane, to a particle Q of mass $M\ \text{kg}$ hanging freely. The system is released from rest. Q moves down with acceleration $2\ \text{m s}^{-2}$ and the tension in the string is $25\ \text{N}$.

(a) Find the value of M. [2 marks]

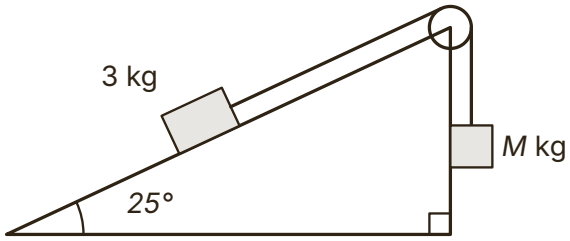

Answer .....

(b) Find the coefficient of friction between P and the plane. [4 marks]

Answer .....

© 2026 Mathswariz. All rights reserved. Free for personal and classroom use. Not to be sold or republished.

(c) Find the magnitude of the force exerted on the pulley by the string. [3 marks]

Answer .....

(d) State how you have used the fact that the string is light and inextensible, and the fact that the pulley is smooth. [2 marks]

Total for D4: 11 marks

© 2026 Mathswariz. All rights reserved. Free for personal and classroom use. Not to be sold or republished.

D5 A car of mass $1000\ \text{kg}$ tows a trailer of mass $600\ \text{kg}$ up a straight road inclined at α to the horizontal, where $\sin\alpha = 0.1$. The tow bar is light and parallel to the road. The resistances to motion are $250\ \text{N}$ on the car and $150\ \text{N}$ on the trailer. The car and trailer accelerate at $0.6\ \text{m s}^{-2}$.

(a) Find the driving force of the car's engine. [3 marks]

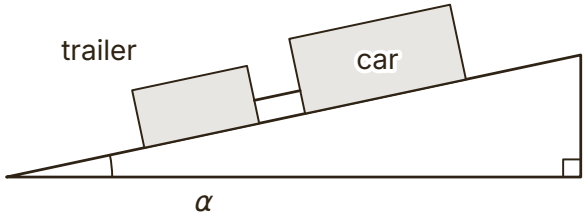

Answer .....

(b) Find the tension in the tow bar. [3 marks]

Answer .....

© 2026 Mathswariz. All rights reserved. Free for personal and classroom use. Not to be sold or republished.

(c) When the speed is $15\ \mathrm{m\ s^{-1}}$ the tow bar breaks. The resistance on the trailer is unchanged. Find the distance the trailer moves up the road before it comes to rest. [4 marks]

Answer .....

(d) The driving force does not change. Find the acceleration of the car just after the tow bar breaks. [2 marks]

Answer .....

Total for D5: 12 marks

© 2026 Mathswariz. All rights reserved. Free for personal and classroom use. Not to be sold or republished.

No route is given. The hints are at the end of the sheet. Use one at a time.

© 2026 Mathswariz. All rights reserved. Free for personal and classroom use. Not to be sold or republished.

E1 A particle P of mass $2\ \text{kg}$ is on a rough plane inclined at $30°$ to the horizontal. The coefficient of friction between P and the plane is 0.2. A light inextensible string from P lies along a line of greatest slope, passes over a small smooth pulley at the top of the plane, and is attached to a particle Q of mass $3\ \text{kg}$ which hangs $0.9\ \text{m}$ above the ground. P is far from the pulley. The system is released from rest. Q hits the ground and stays there. Find the time from the release until the string is taut again, and the speed of P at that moment. [10 marks]

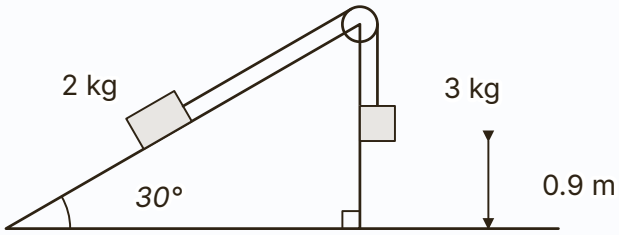

Answer .....

© 2026 Mathswariz. All rights reserved. Free for personal and classroom use. Not to be sold or republished.

Extension hints

Cover these with paper. Uncover one at a time.

E1

Hint 1 There are three stages: both moving until Q lands; P moving up with the string slack; P sliding back down. Each stage has its own acceleration.

Hint 2 The string is taut again when P has slid back to the point where it was when Q landed.

Hint 3 Check that P does slide back: compare $\tan 30^\circ$ with 0.2. On the way down, friction acts up the plane.

How did it go?

Colour one circle on each line: not yet, nearly, yes.

I can write an equation of motion for each particle when one particle is on a rough slope, and find the acceleration and the tension. ○ ○ ○

I can find the size and direction of the force the string exerts on the pulley. ○ ○ ○

I can follow the motion after a hanging particle reaches the ground or a string breaks. ○ ○ ○

I can find the acceleration and the tension when connected bodies on rough ground are pulled by a force at an angle. ○ ○ ○

© 2026 Mathswariz. All rights reserved. Free for personal and classroom use. Not to be sold or republished.