Friction and static particles

100 marks

Hints online, answers free with an account: mathswariz.uk/worksheets/a-level-mechanics-year-2-friction-and-static-particles/

Date

© 2026 Mathswariz. All rights reserved. Free for personal and classroom use. Not to be sold or republished.

A Do Now

Quick questions to start. Some use earlier lessons; some set a slip that costs marks.

A1 Last lesson [2 marks]

A particle of mass $2\ \text{kg}$ is held at rest on a smooth plane inclined at 20° to the horizontal by a force acting up a line of greatest slope. Find the size of the force.

Answer .....

A2 Needed today [3 marks]

A box of mass $5\ \text{kg}$ rests on rough horizontal ground. The coefficient of friction between the box and the ground is 0.4. A horizontal force of $12\ \text{N}$ acts on the box. Show that the box does not move, and state the size of the friction force.

Answer .....

A3 Needed today [2 marks]

An angle α is acute and $\tan\alpha = \frac{5}{12}$. Write down the exact values of $\sin\alpha$ and $\cos\alpha$.

Answer .....

A4 Common slip [2 marks]

A block of mass $4\ \text{kg}$ is pulled along a horizontal floor by a force of $15\ \text{N}$ acting at 30° above the horizontal. Find the normal reaction between the block and the floor.

Answer .....

© 2026 Mathswariz. All rights reserved. Free for personal and classroom use. Not to be sold or republished.

PART 1 Friction on a horizontal surface

EXAMPLE 1 · I DO

A block of mass $6\ \text{kg}$ rests on rough horizontal ground. A horizontal force of $21\ \text{N}$ acts on the block, and the block is on the point of moving. Find the coefficient of friction.



Hint On the point of moving, the friction is limiting: $F = \mu R$.

YOUR TURN · WE DO

B1 A crate of mass $7\ \text{kg}$ rests on rough horizontal ground. The coefficient of friction is 0.45. Find the least horizontal force that will move the crate. [3 marks]



Answer .....

© 2026 Mathswariz. All rights reserved. Free for personal and classroom use. Not to be sold or republished.

EXAMPLE 2 · I DO

A box of mass $6\ \text{kg}$ rests on rough horizontal ground. The coefficient of friction is 0.35. A rope attached to the box makes an angle of $25°$ above the horizontal, and the tension in the rope is $P\ \text{N}$. The box is on the point of moving. Find P.

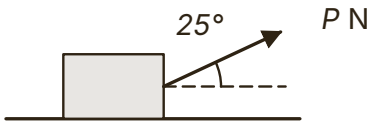

Hint The pull has an upward component, so R is less than $6g$. "On the point of moving" means $F = \mu R$.

YOUR TURN · WE DO

B2 A crate of mass $4\ \text{kg}$ rests on rough horizontal ground. The coefficient of friction is 0.5. The crate is pushed by a force of $P\ \text{N}$ acting at $30°$ below the horizontal, and it is on the point of moving. Find P and the normal reaction. [5 marks]

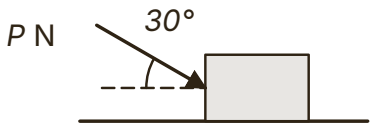

Answer .....

© 2026 Mathswariz. All rights reserved. Free for personal and classroom use. Not to be sold or republished.

C1 A box of mass $8\ \text{kg}$ rests on rough horizontal ground, with coefficient of friction 0.5. A horizontal force of $30\ \text{N}$ acts on it and it does not move. Kit says the friction force is $\mu R = 0.5 \times 8g = 39.2\ \text{N}$. Explain why Kit is wrong, and find the friction force. [4 marks]

Answer .....

© 2026 Mathswariz. All rights reserved. Free for personal and classroom use. Not to be sold or republished.

C2 A crate of mass $10\ \text{kg}$ rests on rough horizontal ground, with coefficient of friction 0.6. Dev says the smallest force that will move the crate is a horizontal one. Find the force needed to just move the crate when it is horizontal, and when it acts at 30° above the horizontal. Is Dev right? [5 marks]

Answer .....

© 2026 Mathswariz. All rights reserved. Free for personal and classroom use. Not to be sold or republished.

PART 2 A particle at rest on a rough slope

EXAMPLE 3 · I DO

A particle of mass $3\ \text{kg}$ rests on a rough plane inclined at 25° to the horizontal. No other force acts. Find the friction force and the normal reaction, and the least possible value of the coefficient of friction.

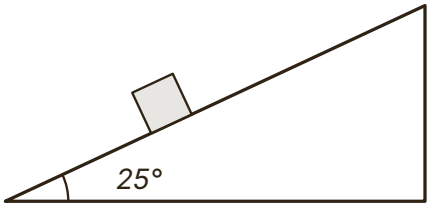

Hint Resolve parallel and perpendicular to the plane. At rest, $F \leq \mu R$.

YOUR TURN · WE DO

B3 A particle of mass $4\ \text{kg}$ rests on a rough plane inclined at 18° to the horizontal. No other force acts. Find the friction force and the normal reaction, and the least possible value of the coefficient of friction. [4 marks]

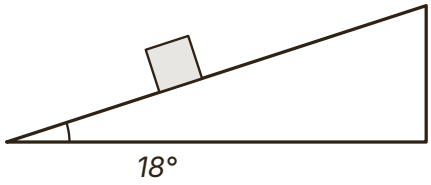

Answer .....

© 2026 Mathswariz. All rights reserved. Free for personal and classroom use. Not to be sold or republished.

EXAMPLE 4 · I DO

A particle of mass $3\ \text{kg}$ rests on a rough plane inclined at 20° to the horizontal. The coefficient of friction is 0.5. A force of $15\ \text{N}$ acts on the particle up a line of greatest slope, and the particle stays at rest. Find the size and direction of the friction force, and show that the friction is not limiting.

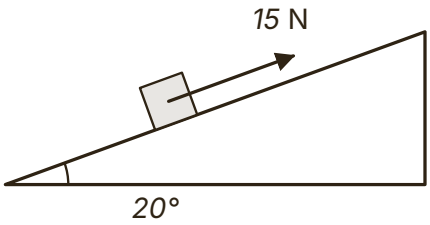

Hint Compare the push up the slope with the component of the weight down the slope. Friction makes up the difference, in whichever direction is needed.

YOUR TURN · WE DO

© 2026 Mathswariz. All rights reserved. Free for personal and classroom use. Not to be sold or republished.

C3 A small rubber block rests on a rough plane inclined at 50° to the horizontal, with no other force acting. Mia says this is impossible, because the coefficient of friction cannot be more than 1. Show that $\mu \geq \tan 50^\circ$, and explain why Mia is wrong.

B4 A particle of mass $2\ \text{kg}$ rests on a rough plane inclined at 35° to the horizontal. The coefficient of friction is 0.4. A force of $5\ \text{N}$ acts on the particle up a line of greatest slope. Find the size and direction of the friction force, and decide whether the particle stays at rest. [5 marks]

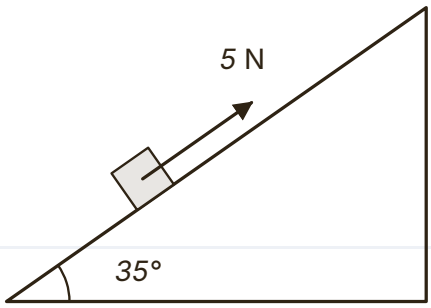

Answer .....

[4 marks]

© 2026 Mathswariz. All rights reserved. Free for personal and classroom use. Not to be sold or republished.

C4 A particle of mass $2\ \text{kg}$ rests on a rough plane inclined at 20° to the horizontal. The coefficient of friction is 0.3. A force of $12\ \text{N}$ acts up a line of greatest slope. Ama says friction always acts up a slope because it stops things sliding down. Find the friction force, giving its direction, and decide whether the particle stays at rest. [5 marks]

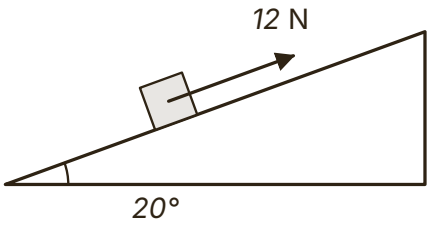

Answer .....

© 2026 Mathswariz. All rights reserved. Free for personal and classroom use. Not to be sold or republished.

PART 3 Limiting equilibrium on a slope

© 2026 Mathswariz. All rights reserved. Free for personal and classroom use. Not to be sold or republished.

EXAMPLE 5 · I DO

A particle of mass $5\ \text{kg}$ rests on a rough plane inclined at 30° to the horizontal. The coefficient of friction is 0.25. A force of $P\ \text{N}$ acts up a line of greatest slope. Find the range of values of P for which the particle stays at rest.

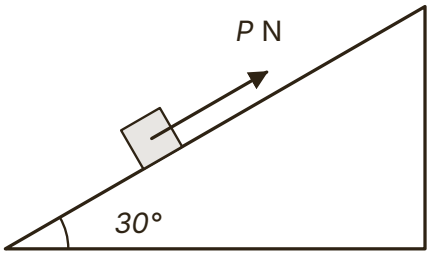

Hint Two limiting cases. When P is smallest the particle is about to slip down, so friction acts up the slope. When P is largest it is about to move up, so friction acts down.

YOUR TURN · WE DO

© 2026 Mathswariz. All rights reserved. Free for personal and classroom use. Not to be sold or republished.

B5 [6 marks]

A particle of mass $3\ \text{kg}$ rests on a rough plane inclined at α to the horizontal, where $\tan\alpha = \frac{3}{4}$. The coefficient of friction is 0.3. A force of $P\ \text{N}$ acts up a line of greatest slope. Find the range of values of P for which the particle stays at rest.

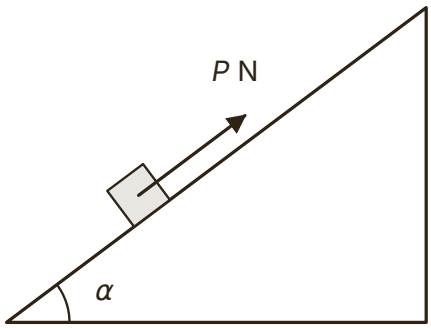

Answer .....

© 2026 Mathswariz. All rights reserved. Free for personal and classroom use. Not to be sold or republished.

EXAMPLE 6 · I DO

A particle of mass $4\ \text{kg}$ is on a rough plane inclined at 25° to the horizontal. The coefficient of friction is 0.3. A horizontal force of $X\ \text{N}$, in the vertical plane through a line of greatest slope, acts on the particle, which is on the point of moving up the plane. Find X and the normal reaction.

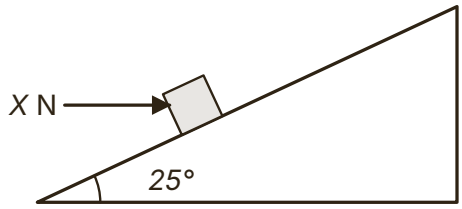

Hint The horizontal force has a component $X\cos 25^\circ$ up the plane and a component $X\sin 25^\circ$ into the plane. Write R in terms of X first.

YOUR TURN · WE DO

© 2026 Mathswariz. All rights reserved. Free for personal and classroom use. Not to be sold or republished.

PRACTICE · YOU DO

C5 A particle of mass $2.5\ \text{kg}$ rests on a rough plane inclined at 25° to the horizontal. A horizontal force of $30\ \text{N}$, in the vertical plane through a line of greatest slope, acts towards the plane. Cal writes $R = 2.5g\cos 25^\circ$. Explain his error. Find the friction force and the normal reaction, and the least possible value of the coefficient of friction. [5 marks]

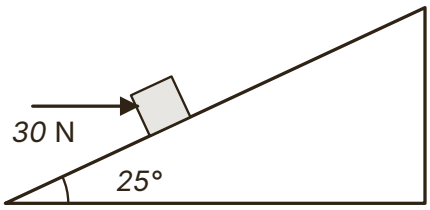

B6 A particle of mass $2\ \text{kg}$ is on a rough plane inclined at 40° to the horizontal. The coefficient of friction is 0.2. Without help, the particle would slide down. Find the least horizontal force, in the vertical plane through a line of greatest slope, that holds the particle at rest. [6 marks]

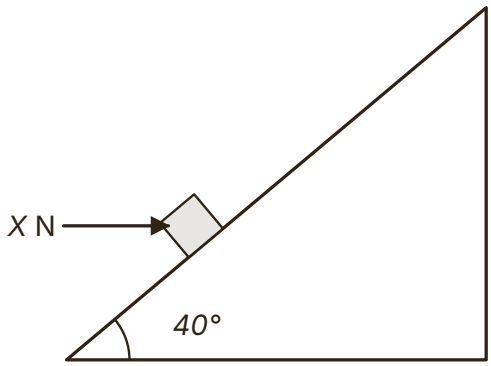

Answer .....

© 2026 Mathswariz. All rights reserved. Free for personal and classroom use. Not to be sold or republished.

C6 A particle of mass $2\ \text{kg}$ is on a rough plane inclined at α to the horizontal, where $\tan\alpha = \frac{3}{4}$. A force of $20\ \text{N}$ acting up a line of greatest slope puts the particle on the point of moving up the plane. Find the smallest force acting up a line of greatest slope that will keep the particle at rest. [7 marks]

Answer .....

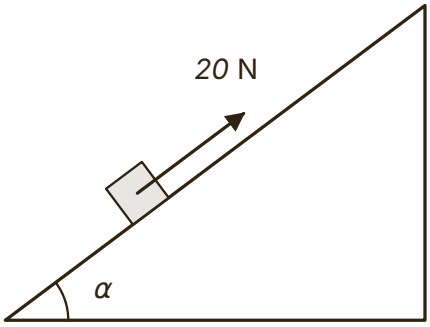

Answer .....

© 2026 Mathswariz. All rights reserved. Free for personal and classroom use. Not to be sold or republished.

D1

A particle of mass $5\ \text{kg}$ is on a rough plane inclined at 30° to the horizontal. The coefficient of friction is 0.4. A horizontal force of $X\ \text{N}$, in the vertical plane through a line of greatest slope, acts towards the plane. Sam finds the least value of X that keeps the particle at rest. He writes: "$X\cos 30^\circ + 0.4 \times 5g\cos 30^\circ = 5g\sin 30^\circ$, so $X = 8.69$."

Sam's value is wrong.

(a) Explain the error in Sam's working. [2 marks]

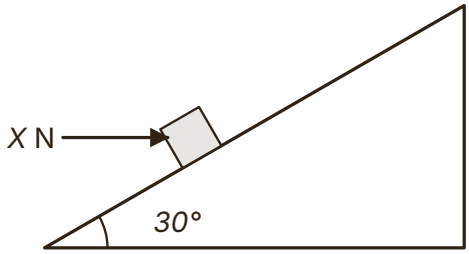

(b) Find the least value of X. [4 marks]

Answer .....

© 2026 Mathswariz. All rights reserved. Free for personal and classroom use. Not to be sold or republished.

(c) Find the greatest value of X for which the particle stays at rest. [4 marks]

Answer .....

(d) Given that $X = 40$, find the size and direction of the friction force. [3 marks]

Answer .....

Total for D1: 13 marks

© 2026 Mathswariz. All rights reserved. Free for personal and classroom use. Not to be sold or republished.

D2 A particle of mass $0.8\ \text{kg}$ is placed on a rough plane inclined at $45°$ to the horizontal. The coefficient of friction is 0.6.

(a) Show that the particle slides down the plane if it is released with no other force acting. [2 marks]

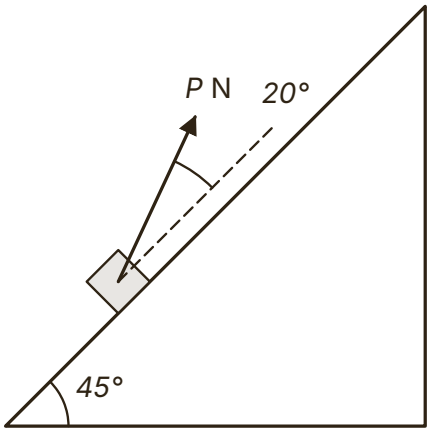

(b) Find the least force acting up a line of greatest slope that keeps the particle at rest. [3 marks]

Answer .....

© 2026 Mathswariz. All rights reserved. Free for personal and classroom use. Not to be sold or republished.

(c) Find the force acting up a line of greatest slope that puts the particle on the point of moving up the plane. [2 marks]

Answer .....

(d) Instead, a force P N inclined at 20° above a line of greatest slope holds the particle on the point of slipping down. Find P, and explain why it is larger than the answer to part (b). [3 marks]

Answer .....

Total for D2: 10 marks

© 2026 Mathswariz. All rights reserved. Free for personal and classroom use. Not to be sold or republished.

E Extension

Stretch

No route is given. The hints are at the end of the sheet. Use one at a time.

E1 A particle of mass $2\ \text{kg}$ is on a rough plane inclined at 30° to the horizontal. The coefficient of friction is 0.5. A force of magnitude $P\ \text{N}$, inclined at an angle θ above a line of greatest slope, puts the particle on the point of moving up the plane. Find the least possible value of P, and the value of θ for which it occurs. [9 marks]

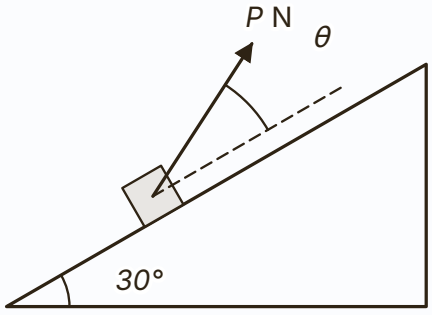

Answer .....

© 2026 Mathswariz. All rights reserved. Free for personal and classroom use. Not to be sold or republished.

Extension hints

Cover these with paper. Uncover one at a time.

E1

Hint 1 Write R and the parallel equation in terms of P and θ; friction acts down the slope and equals $0.5R$.

Hint 2 You should reach $P(\cos\theta + 0.5\sin\theta) = 2g(\sin 30^\circ + 0.5\cos 30^\circ)$. P is least when the bracket is greatest.

Hint 3 Write $\cos\theta + 0.5\sin\theta$ in the form $r\cos(\theta - \beta)$.

How did it go?

Colour one circle on each line: not yet, nearly, yes.

I can find the friction acting on a particle at rest and decide whether it is limiting, using F ≤ μR.	○ ○ ○
I can find the normal reaction when an applied force has a component perpendicular to the surface.	○ ○ ○
I can find the range of values of a force that keeps a particle at rest on a rough slope.	○ ○ ○
I can find the coefficient of friction, or the least force needed, for a particle in limiting equilibrium.	○ ○ ○

© 2026 Mathswariz. All rights reserved. Free for personal and classroom use. Not to be sold or republished.