Horizontal projection and components

122 marks

Hints online, answers free with an account: mathswariz.uk/worksheets/a-level-mechanics-year-2-horizontal-projection-components/

Date

© 2026 Mathswariz. All rights reserved. Free for personal and classroom use. Not to be sold or republished.

A Do Now

Quick questions to start. Some use earlier work; some set a slip that costs marks.

A1 Needed today [3 marks]

A stone is dropped from rest from a point $19.6\ \text{m}$ above horizontal ground. Find the time it takes to reach the ground and its speed as it hits the ground.

Answer .....

A2 Needed today [2 marks]

A force of $40\ \text{N}$ acts at 30° above the horizontal. Find its horizontal and vertical components.

Answer .....

A3 Common slip [3 marks]

A ball is thrown vertically downwards with speed $3\ \text{m s}^{-1}$ from a point $14\ \text{m}$ above the ground. Find the time it takes to reach the ground.

Answer .....

A4 Needed today [2 marks]

Given that $\tan\alpha = \frac{3}{4}$ and α is acute, write down the exact values of $\sin\alpha$ and $\cos\alpha$.

Answer .....

© 2026 Mathswariz. All rights reserved. Free for personal and classroom use. Not to be sold or republished.

B Example, then your turn

A-Level

Your teacher works through each example with you. Then try the one beside it.

EXAMPLE 1

A particle is projected horizontally with speed $15\ \text{m s}^{-1}$ from a point $44.1\ \text{m}$ above horizontal ground. Find the time it takes to reach the ground and the horizontal distance it travels in that time.

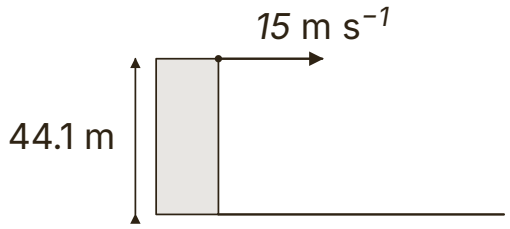

Hint Work the two directions separately. Vertically: $u_y = 0$ and $a = 9.8$. Horizontally: no force, so constant speed 15.

B1 A particle is projected horizontally with speed $12\ \text{m s}^{-1}$ from a point $19.6\ \text{m}$ above horizontal ground. Find the time it takes to reach the ground, the horizontal distance it travels, and the straight-line distance from the point of projection to the point where it lands. [4 marks]

Answer .....

© 2026 Mathswariz. All rights reserved. Free for personal and classroom use. Not to be sold or republished.

EXAMPLE 2

A ball is projected horizontally from the top of a tower $78.4\ \text{m}$ high. It lands on horizontal ground $56\ \text{m}$ from the foot of the tower. Find the speed of projection.

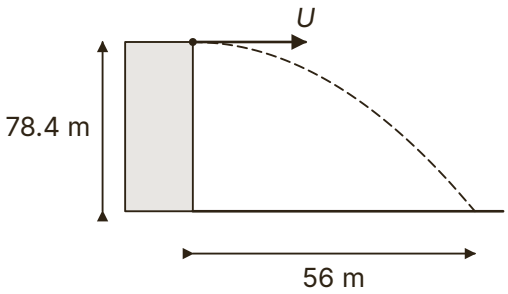

Hint The vertical motion gives the time. The horizontal motion then gives U.

B2 A particle is projected horizontally from a point $2.5\ \text{m}$ above a horizontal floor. It hits the floor at a point $5\ \text{m}$ horizontally from the point of projection. Find the time of flight and the speed of projection. [4 marks]

Answer .....

© 2026 Mathswariz. All rights reserved. Free for personal and classroom use. Not to be sold or republished.

EXAMPLE 3

A stone is projected horizontally with speed $21\ \text{m s}^{-1}$ from the top of a cliff $44.1\ \text{m}$ above the sea. Find the speed of the stone as it hits the sea and the angle its direction of motion makes with the horizontal at that instant.

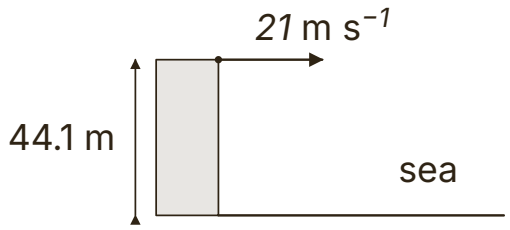

Hint The horizontal component of the velocity never changes. Find the vertical component at the sea, then combine the two.

B3 A particle is projected horizontally with speed $10\ \text{m s}^{-1}$ from a point $19.6\ \text{m}$ above horizontal ground. Find the speed of the particle as it reaches the ground and the angle its direction of motion makes with the horizontal at that instant. [5 marks]

Answer .....

© 2026 Mathswariz. All rights reserved. Free for personal and classroom use. Not to be sold or republished.

EXAMPLE 4

A particle P is projected horizontally with speed $14.7\ \text{m s}^{-1}$ from a point O high above the ground. Find (a) the time at which P is moving at $45°$ below the horizontal, (b) the time at which the speed of P is $24.5\ \text{m s}^{-1}$, (c) the distance of P from O at the time in (b).

Hint At $45°$ the two components of the velocity are equal. For a given speed, find v_y from $v^2 = v_x^2 + v_y^2$, then t from $v_y = 9.8t$.

B4 A particle is projected horizontally with speed $9.8\ \text{m s}^{-1}$ from a point high above the ground. Find the time at which it is moving at $30°$ below the horizontal, and the time at which its speed is $19.6\ \text{m s}^{-1}$. [5 marks]

Answer .....

© 2026 Mathswariz. All rights reserved. Free for personal and classroom use. Not to be sold or republished.

EXAMPLE 5

A stone is projected from a point A at the top of a cliff, $59.1\ \text{m}$ above the sea, with speed $13\ \text{m s}^{-1}$ at an angle α below the horizontal, where $\tan\alpha = \frac{5}{12}$. (a) Find the horizontal and vertical components of the velocity of projection, and write the velocity as a vector in the form $(p\mathbf{i} + q\mathbf{j})\ \text{m s}^{-1}$, where $\mathbf{i}$ is horizontal and $\mathbf{j}$ is vertically upwards. (b) Find the time the stone takes to reach the sea and the horizontal distance it travels. (c) Find the speed of the stone as it hits the sea.

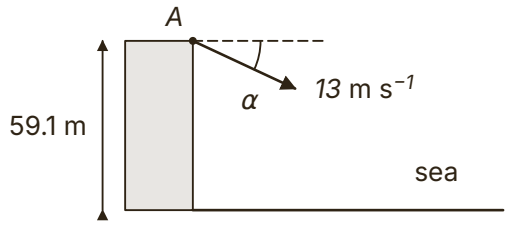

Hint $\cos\alpha = \frac{12}{13}$, $\sin\alpha = \frac{5}{13}$. The vertical component is DOWNWARDS, so with down as positive, $u_y = +5$.

B5 A ball is projected from a point $25\ \text{m}$ above horizontal ground with speed $20\ \text{m s}^{-1}$ at $30°$ below the horizontal. Write the velocity of projection in the form $(p\mathbf{i} + q\mathbf{j})\ \text{m s}^{-1}$, with $\mathbf{j}$ vertically upwards, and find the time the ball takes to reach the ground and the horizontal distance it travels. [6 marks]

Answer .....

© 2026 Mathswariz. All rights reserved. Free for personal and classroom use. Not to be sold or republished.

C1 A ball is projected horizontally with speed $8\ \mathrm{m\ s^{-1}}$ from a point $4.9\ \mathrm{m}$ above horizontal ground. Sam says: "It lands after $1\ \mathrm{s}$, when its vertical speed is $9.8\ \mathrm{m\ s^{-1}}$, so it hits the ground at $8 + 9.8 = 17.8\ \mathrm{m\ s^{-1}}$." Explain Sam's mistake and find the correct speed at which the ball hits the ground. [4 marks]

Answer .....

© 2026 Mathswariz. All rights reserved. Free for personal and classroom use. Not to be sold or republished.

C2 A stone is projected horizontally with speed $12\ \text{m s}^{-1}$ from the top of a cliff and hits the sea $2.5\ \text{s}$ later. Ali says: "The direction of motion on impact is $\tan^{-1}\left(\dfrac{12}{24.5}\right) = 26.1^\circ$ below the horizontal." Explain Ali's mistake and give the correct direction. [4 marks]

Answer .....

© 2026 Mathswariz. All rights reserved. Free for personal and classroom use. Not to be sold or republished.

C3 A ball is projected from a point $30\ \text{m}$ above horizontal ground with speed $26\ \text{m s}^{-1}$ at an angle α below the horizontal, where $\tan\alpha = \frac{5}{12}$. Ben writes: "Horizontal component $26\sin\alpha = 10$, vertical component $26\cos\alpha = 24$." Explain Ben's mistake. Find the time the ball takes to reach the ground and the horizontal distance it travels. [6 marks]

Answer .....

© 2026 Mathswariz. All rights reserved. Free for personal and classroom use. Not to be sold or republished.

C4 A dart is thrown horizontally at a vertical dartboard. It hits the board $0.2\ \text{m}$ below the level from which it was thrown, at a point $2.4\ \text{m}$ horizontally from where it was thrown. Kim writes $2.4 = 4.9t^2$. Explain Kim's mistake. Find the speed with which the dart was thrown. [4 marks]

Answer .....

© 2026 Mathswariz. All rights reserved. Free for personal and classroom use. Not to be sold or republished.

C5 Two balls are projected horizontally at the same instant from the same point on the top of a wall $11.025\ \text{m}$ high, in the same direction: ball A at $6\ \text{m s}^{-1}$ and ball B at $10\ \text{m s}^{-1}$. Leo says B reaches the ground first because it is faster. Explain why Leo is wrong, and find how far apart the balls land. [4 marks]

Answer .....

© 2026 Mathswariz. All rights reserved. Free for personal and classroom use. Not to be sold or republished.

C6 A ball is projected horizontally from a window and is modelled as a particle moving freely under gravity. (i) State two assumptions made in this model. (ii) Air resistance is now included in the model. State, with a reason, how the horizontal distance travelled before landing would change. [4 marks]

© 2026 Mathswariz. All rights reserved. Free for personal and classroom use. Not to be sold or republished.

D1 A tennis player hits a ball horizontally from a point S, $2.45\ \text{m}$ above horizontal ground, with speed $30\ \text{m s}^{-1}$. The ball moves in a vertical plane perpendicular to a net. The net is $12\ \text{m}$ from S, measured horizontally, and its top is $0.9\ \text{m}$ above the ground. The ball is modelled as a particle moving freely under gravity.

(a) Find the height of the ball above the ground as it passes over the net. [3 marks]

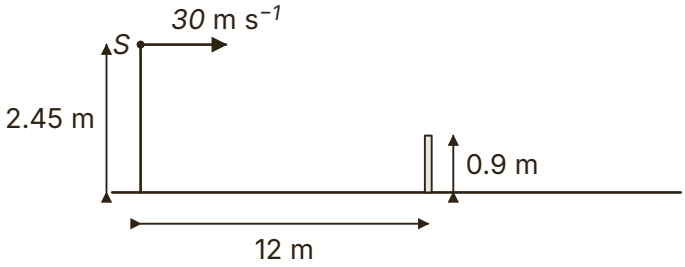

Answer .....

© 2026 Mathswariz. All rights reserved. Free for personal and classroom use. Not to be sold or republished.

(b) Find the horizontal distance beyond the net at which the ball hits the ground. [3 marks]

Answer .....

(c) The player hits the ball horizontally from S with speed $U\ \mathrm{m\ s^{-1}}$. Find the least value of U for which the ball clears the net. [4 marks]

Answer .....

© 2026 Mathswariz. All rights reserved. Free for personal and classroom use. Not to be sold or republished.

(d) State one limitation of the model and how it would affect your answer to part (c). [2 marks]

Total for D1: 12 marks

© 2026 Mathswariz. All rights reserved. Free for personal and classroom use. Not to be sold or republished.

D2

A stone is projected horizontally with speed $14\ \text{m s}^{-1}$ from the top of a cliff $44.1\ \text{m}$ above the sea. Jo works out how it hits the sea: "Time $3\ \text{s}$, so the vertical speed is $29.4\ \text{m s}^{-1}$. The stone hits the sea at $14 + 29.4 = 43.4\ \text{m s}^{-1}$, moving at $\tan^{-1}\left(\frac{14}{29.4}\right) = 25.5°$ below the horizontal."

Jo has made two mistakes.

(a) Explain both of Jo's mistakes. Find the correct speed and direction of the stone as it hits the sea. [6 marks]

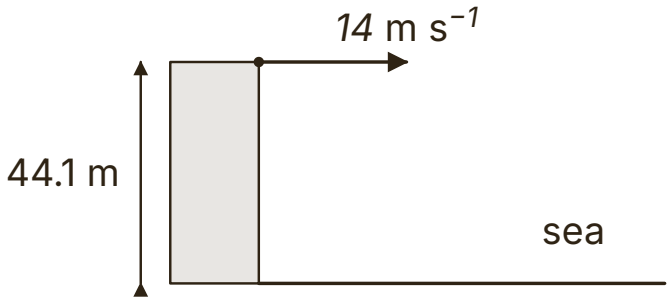

Answer .....

© 2026 Mathswariz. All rights reserved. Free for personal and classroom use. Not to be sold or republished.

(b) Find the height of the stone above the sea at the instant it is moving at 45° below the horizontal. [4 marks]

Answer .....

Total for D2: 10 marks

© 2026 Mathswariz. All rights reserved. Free for personal and classroom use. Not to be sold or republished.

D3 A particle P is projected horizontally from a point A which is $30\ \mathrm{m}$ above horizontal ground. When P has moved $20\ \mathrm{m}$ horizontally, it is $10\ \mathrm{m}$ below the level of A. Find the distance from the point on the ground vertically below A to the point where P lands. [7 marks]

Answer .....

© 2026 Mathswariz. All rights reserved. Free for personal and classroom use. Not to be sold or republished.

D4 A ball is thrown from a window $15\ \text{m}$ above horizontal ground with speed $15\ \text{m s}^{-1}$ at an angle α below the horizontal, where $\sin\alpha = 0.6$. The unit vectors $\mathbf{i}$ and $\mathbf{j}$ are horizontal and vertically upwards.

(a) Write the velocity of projection in the form $(p\mathbf{i} + q\mathbf{j})\ \text{m s}^{-1}$. [2 marks]

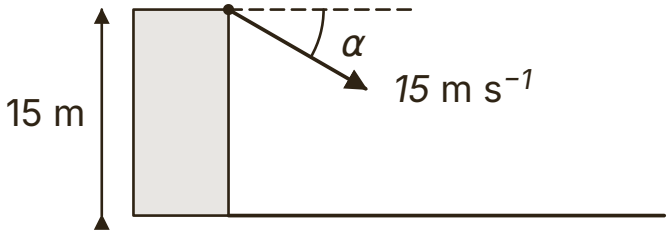

Answer .....

(b) Find the time the ball takes to reach the ground. [3 marks]

Answer .....

© 2026 Mathswariz. All rights reserved. Free for personal and classroom use. Not to be sold or republished.

(c) Hence show that the ball is never moving in a direction at $60°$ or more below the horizontal. [4 marks]

Answer .....

Total for D4: 9 marks

© 2026 Mathswariz. All rights reserved. Free for personal and classroom use. Not to be sold or republished.

D5 A ball rolls off the top of a flight of steps at the point O with a horizontal velocity of $3\ \text{m s}^{-1}$. Each step is $0.2\ \text{m}$ high and $0.25\ \text{m}$ deep, and the edges of the steps lie on a straight line through O. The ball is modelled as a particle moving freely under gravity.

(a) Taking x metres horizontally and y metres vertically downwards from O, show that the path of the ball is $y = \frac{49}{90}x^2$. [3 marks]

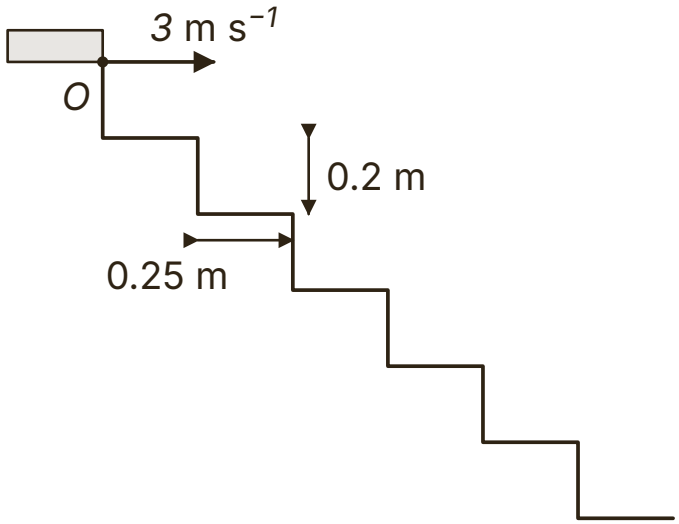

Answer .....

© 2026 Mathswariz. All rights reserved. Free for personal and classroom use. Not to be sold or republished.

(b) Hence find which step the ball hits first. (The step just below O is step 1.) [5 marks]

Answer .....

Total for D5: 8 marks

© 2026 Mathswariz. All rights reserved. Free for personal and classroom use. Not to be sold or republished.

D6 A marble is pushed along a smooth horizontal table top. It moves $1.4\ \text{m}$ along the table at a constant $3.5\ \text{m s}^{-1}$ and then leaves the edge of the table, which is $0.784\ \text{m}$ above a horizontal floor.

(a) Find the total time from the start of the $1.4\ \text{m}$ until the marble hits the floor, and the horizontal distance from the edge of the table to the point where it lands. [4 marks]

Answer .....

(b) Explain how you have used the fact that the table top is smooth, and state one other assumption you have made. [2 marks]

Total for D6: 6 marks

© 2026 Mathswariz. All rights reserved. Free for personal and classroom use. Not to be sold or republished.

E Extension

Stretch

No route is given. The hints are at the end of the sheet. Use one at a time.

E1 A plane slopes downwards from a point O at 30° to the horizontal. A particle is projected horizontally from O with speed $14\ \mathrm{m\ s^{-1}}$, in the vertical plane containing a line of greatest slope, and lands on the plane at A. Find the distance OA, and the greatest distance of the particle from the plane during its flight. [10 marks]

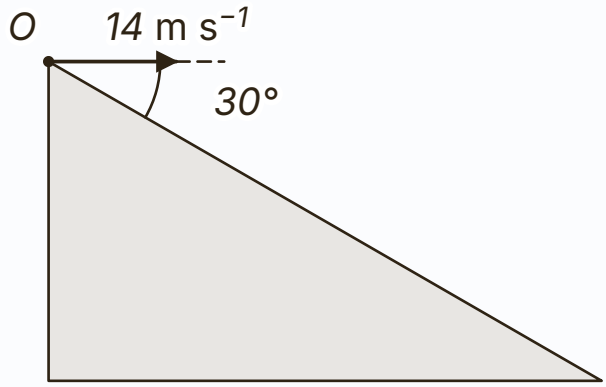

Answer .....

© 2026 Mathswariz. All rights reserved. Free for personal and classroom use. Not to be sold or republished.

Extension hints

Cover these with paper. Uncover one at a time.

E1

Hint 1 Take x horizontally and y vertically downwards from O. The plane is the line $y = x\tan 30°$.

Hint 2 The particle lands when $4.9t^2 = 14t\tan 30°$. It is furthest from the plane when its velocity is parallel to the plane.

Hint 3 The perpendicular distance from a point (x, y) below O to the line $y = x\tan 30°$ is $(x\tan 30° - y)\cos 30°$.

How did it go?

Colour one circle on each line: not yet, nearly, yes.

I can find the time of flight and the horizontal distance for a particle projected horizontally.	○ ○ ○
I can find the speed and direction of a projectile at any instant.	○ ○ ○
I can resolve a velocity into horizontal and vertical components and write it as a vector.	○ ○ ○
I can solve problems where a particle is projected below the horizontal from a height.	○ ○ ○

© 2026 Mathswariz. All rights reserved. Free for personal and classroom use. Not to be sold or republished.