Inclined planes

113 marks

Hints online, answers free with an account: mathswariz.uk/worksheets/a-level-mechanics-year-2-inclined-planes/

Date

© 2026 Mathswariz. All rights reserved. Free for personal and classroom use. Not to be sold or republished.

A Do Now

Quick questions to start. Some use earlier lessons; some set a slip that costs marks.

A1 Needed today [2 marks]

A force of $25\ \text{N}$ acts at 30° above the horizontal. Find its horizontal and vertical components.

Answer .....

A2 Needed today [2 marks]

An angle α is acute and $\tan\alpha = \frac{7}{24}$. Write down the exact values of $\sin\alpha$ and $\cos\alpha$.

Answer .....

A3 Needed today [2 marks]

A particle starts from rest and moves in a straight line with constant acceleration $2.45\ \text{m s}^{-2}$. Find its speed after $4\ \text{s}$ and the distance it has travelled.

Answer .....

A4 Common slip [2 marks]

A force of $58.8\ \text{N}$ acts vertically downwards. A line is inclined at 30° to the horizontal. Find the component of the force along the line and the component perpendicular to the line.

Answer .....

© 2026 Mathswariz. All rights reserved. Free for personal and classroom use. Not to be sold or republished.

A5 Needed today [2 marks]

A particle moving at $12\ \mathrm{m\ s^{-1}}$ has a constant deceleration of $3\ \mathrm{m\ s^{-2}}$. Find the distance it travels before it comes to rest.

Answer .....

© 2026 Mathswariz. All rights reserved. Free for personal and classroom use. Not to be sold or republished.

B Example, then your turn

A-Level

Your teacher works through each example with you. Then try the one beside it.

EXAMPLE 1

A particle of mass $4\ \text{kg}$ is released from rest on a smooth plane inclined at $25°$ to the horizontal. Find the normal reaction of the plane on the particle, the acceleration of the particle, and its speed after it has slid $3\ \text{m}$.

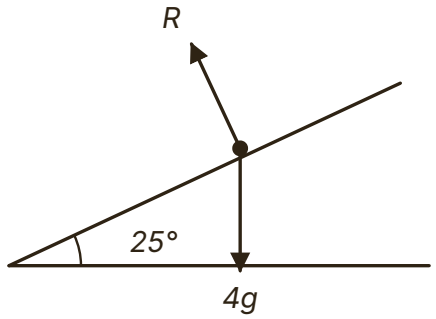

Hint Resolve perpendicular to the plane (no acceleration that way) for R, and parallel to the plane for the equation of motion. The weight makes an angle of $25°$ with the normal to the plane.

B1 A particle of mass $2.5\ \text{kg}$ is released from rest at a point A on a smooth plane inclined at $35°$ to the horizontal. Find the normal reaction, the acceleration, and the time it takes to slide $5\ \text{m}$ down the plane from A. [5 marks]

Answer .....

© 2026 Mathswariz. All rights reserved. Free for personal and classroom use. Not to be sold or republished.

EXAMPLE 2

A particle of mass $3\ \text{kg}$ is on a smooth plane inclined at an angle α to the horizontal, where $\tan\alpha = \frac{3}{4}$. A force of $12\ \text{N}$ acts on the particle up the line of greatest slope. Find the acceleration of the particle, stating its direction, and the normal reaction.

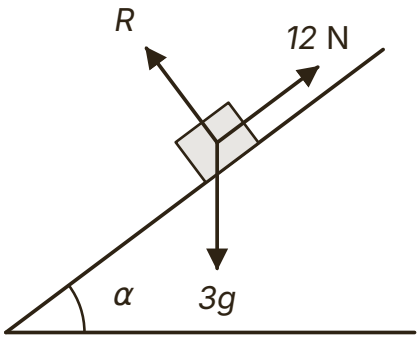

Hint $\tan\alpha = \frac{3}{4}$ gives $\sin\alpha = \frac{3}{5}$ and $\cos\alpha = \frac{4}{5}$. Compare $12\ \text{N}$ with the component of the weight down the slope to see which way the particle accelerates.

B2 A particle of mass $5\ \text{kg}$ is on a smooth plane inclined at an angle α to the horizontal, where $\tan\alpha = \frac{5}{12}$. A force of $25\ \text{N}$ acts on the particle up the line of greatest slope. Find the acceleration of the particle, stating its direction, and the normal reaction. [4 marks]

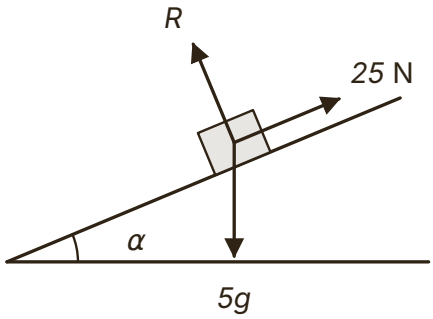

Answer .....

© 2026 Mathswariz. All rights reserved. Free for personal and classroom use. Not to be sold or republished.

EXAMPLE 3

A particle of mass $2\ \text{kg}$ is on a smooth plane inclined at $30°$ to the horizontal. A horizontal force of $15\ \text{N}$, in the vertical plane containing the line of greatest slope, pushes the particle towards the plane. Find the acceleration of the particle and the normal reaction.

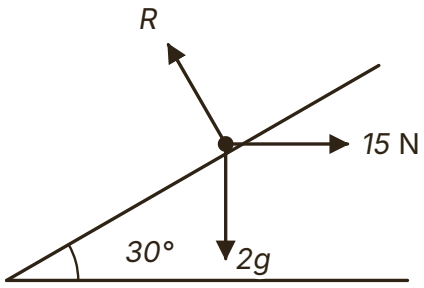

Hint The horizontal force makes an angle of $30°$ with the slope. Its component along the slope is $15\cos 30°$ and its component into the plane is $15\sin 30°$, which adds to the normal reaction.

B3 A particle of mass $4\ \text{kg}$ is on a smooth plane inclined at $20°$ to the horizontal. A horizontal force of $30\ \text{N}$, in the vertical plane containing the line of greatest slope, pushes the particle towards the plane. Find the acceleration of the particle and the normal reaction. [5 marks]

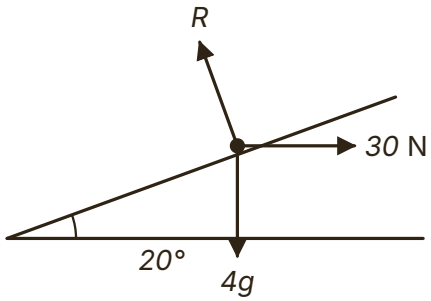

Answer .....

© 2026 Mathswariz. All rights reserved. Free for personal and classroom use. Not to be sold or republished.

EXAMPLE 4

A particle of mass m kg is on a smooth plane inclined at $20°$ to the horizontal. A force of magnitude $6g$ N acts on the particle at $30°$ above the line of greatest slope, and the particle accelerates up the plane at $1.2\ \text{m s}^{-2}$. Find m and the normal reaction.

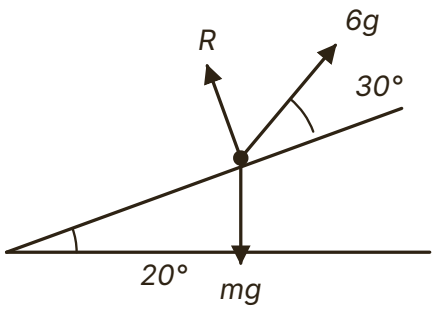

Hint The force is at $30°$ to the slope, so it has $6g\cos 30°$ up the slope and $6g\sin 30°$ away from the plane. The weight is mg with $mg\sin 20°$ down the slope.

B4 A particle of mass m kg is on a smooth plane inclined at $25°$ to the horizontal. A force of magnitude $4g$ N acts on the particle at $15°$ above the line of greatest slope, and the particle accelerates up the plane at $0.8\ \text{m s}^{-2}$. Find m and the normal reaction. [6 marks]

Answer .....

© 2026 Mathswariz. All rights reserved. Free for personal and classroom use. Not to be sold or republished.

EXAMPLE 5

A crate of mass $40\ \text{kg}$ is pulled up a slope inclined at $10°$ to the horizontal by a rope parallel to the slope. The tension in the rope is $150\ \text{N}$ and there is a constant resistance to motion of $30\ \text{N}$. The crate starts from rest. Find its acceleration and its speed after it has moved $8\ \text{m}$.

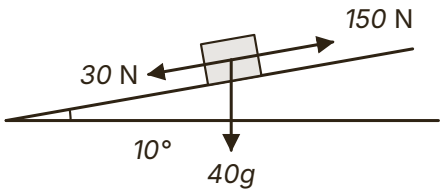

Hint The resistance acts down the slope, against the motion. The weight has a component $40g \sin 10°$ down the slope as well.

B5 A crate of mass $50\ \text{kg}$ is pulled up a slope inclined at $12°$ to the horizontal by a rope parallel to the slope. The tension is $200\ \text{N}$ and there is a constant resistance to motion of $40\ \text{N}$. The crate starts from rest. Find its acceleration and the distance it moves in the first $6\ \text{s}$. [5 marks]

Answer .....

© 2026 Mathswariz. All rights reserved. Free for personal and classroom use. Not to be sold or republished.

C1 A particle of mass $5\ \text{kg}$ rests in equilibrium on a smooth plane inclined at 40° to the horizontal, held by a horizontal force of magnitude $P\ \text{N}$ in the vertical plane containing the line of greatest slope. Ali writes "the normal reaction is $5g\cos 40^\circ = 37.5\ \text{N}$". Explain Ali's mistake, and find P and the normal reaction. [5 marks]

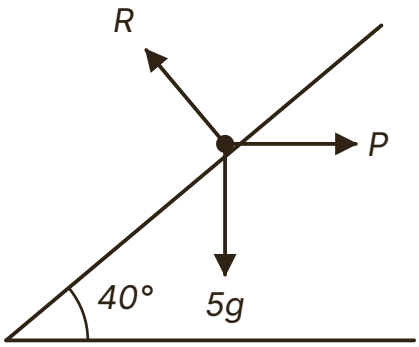

Answer .....

© 2026 Mathswariz. All rights reserved. Free for personal and classroom use. Not to be sold or republished.

C2 A particle is released from rest on a smooth plane inclined at 20° to the horizontal. Raj writes "the acceleration down the plane is $g\cos 20^\circ = 9.21\ \text{m s}^{-2}$". Explain Raj's mistake, and find the time the particle takes to slide $4\ \text{m}$. [4 marks]

Answer .....

© 2026 Mathswariz. All rights reserved. Free for personal and classroom use. Not to be sold or republished.

C3 A van of mass $1200\ \text{kg}$ is driven up a straight road inclined at $6°$ to the horizontal. The driving force is $3000\ \text{N}$ and the resistance to motion is $800\ \text{N}$. Sam writes "$3000 - 800 = 1200a$, so $a = 1.83\ \text{m s}^{-2}$". Explain Sam's mistake and find the acceleration. The driving force is then removed and the resistance is unchanged. Find the deceleration of the van while it still moves up the road. [5 marks]

Answer .....

© 2026 Mathswariz. All rights reserved. Free for personal and classroom use. Not to be sold or republished.

C4 A particle of mass $2\ \text{kg}$ is on a smooth plane inclined at $30°$ to the horizontal. A force of $10\ \text{N}$ acts on it at $25°$ above the line of greatest slope, pulling up the slope. Dee writes "$R = 2g\cos 30° = 17.0\ \text{N}$, and the particle moves up the slope because a force pulls it that way". Explain both of Dee's mistakes, and find the normal reaction and the acceleration of the particle. [5 marks]

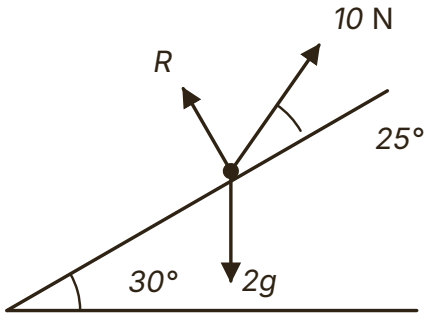

Answer .....

© 2026 Mathswariz. All rights reserved. Free for personal and classroom use. Not to be sold or republished.

D1

A particle is projected up the line of greatest slope of a smooth plane inclined at an angle α to the horizontal, where $\tan\alpha = \frac{7}{24}$. It starts at the point A with speed $8\ \text{m s}^{-1}$. Kim writes: "The only force slowing the particle is gravity, so it decelerates at $9.8\ \text{m s}^{-2}$ and comes to rest $3.27\ \text{m}$ from A."

Kim is wrong.

(a) Explain Kim's error and find the deceleration of the particle. [3 marks]

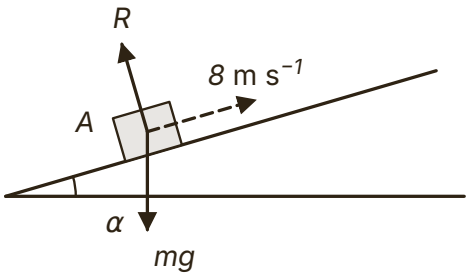

Answer .....

(b) Find the distance from A to the point where the particle comes to instantaneous rest. [2 marks]

Answer .....

© 2026 Mathswariz. All rights reserved. Free for personal and classroom use. Not to be sold or republished.

(c) The particle slides back down the plane. Find the total time from leaving A until it returns to A, and its speed as it passes A. [3 marks]

Answer .....

(d) In an experiment the particle returns to A with a speed less than $8\ \mathrm{m\ s^{-1}}$. Suggest a refinement to the model, and say how it changes your answer to part (b). [2 marks]

Total for D1: 10 marks

© 2026 Mathswariz. All rights reserved. Free for personal and classroom use. Not to be sold or republished.

D2 A particle of mass $4\ \text{kg}$ is on a smooth plane inclined at $30°$ to the horizontal. Two forces act on it: a force of $10\ \text{N}$ up the line of greatest slope, and a horizontal force of magnitude $P\ \text{N}$, in the vertical plane containing the line of greatest slope, pushing the particle towards the plane. The particle starts from rest and accelerates up the plane at $1.5\ \text{m s}^{-2}$. Find P, the normal reaction, and the distance the particle moves in the first $2\ \text{s}$. [7 marks]

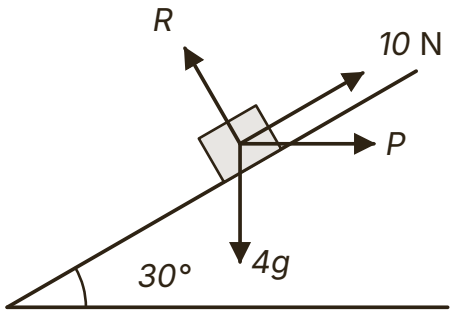

Answer .....

© 2026 Mathswariz. All rights reserved. Free for personal and classroom use. Not to be sold or republished.

D3 A particle is released from rest on a smooth plane inclined at an angle θ to the horizontal. When the angle of the plane is increased to $(\theta + 30)^\circ$, the acceleration of a particle released from rest on it is twice as large.

(a) Show that $\tan\theta = \dfrac{4+\sqrt{3}}{13}$. [4 marks]

Answer .....

(b) Find θ and the acceleration on the steeper plane. [3 marks]

Answer .....

© 2026 Mathswariz. All rights reserved. Free for personal and classroom use. Not to be sold or republished.

(c) A particle slides $3\ \mathrm{m}$ from rest on each plane. Find the ratio of the time on the steeper plane to the time on the first plane. [2 marks]

Answer .....

Total for D3: 9 marks

D4 A cyclist and her bicycle have a total mass of $80\ \mathrm{kg}$. She rides up a straight road inclined at 5° to the horizontal at a constant speed of $6\ \mathrm{m\ s^{-1}}$. The resistance to motion is a constant $25\ \mathrm{N}$. The cyclist and bicycle are modelled as a particle.

(a) Find the driving force. [2 marks]

Answer .....

© 2026 Mathswariz. All rights reserved. Free for personal and classroom use. Not to be sold or republished.

(b) She stops pedalling. Find the distance she travels up the road before she comes to rest. [3 marks]

Answer .....

(c) She then freewheels back down the road, with the resistance unchanged in size. Find the time she takes to return to the point where she stopped pedalling. [3 marks]

Answer .....

© 2026 Mathswariz. All rights reserved. Free for personal and classroom use. Not to be sold or republished.

(d) Give one reason why the resistance to motion is unlikely to be constant, and say how this affects your answer to part (c). [2 marks]

Total for D4: 10 marks

D5 A particle of mass $2\ \text{kg}$ is on a smooth plane inclined at 30° to the horizontal. A force of magnitude $P\ \text{N}$ acts on the particle at an angle β above the line of greatest slope, pulling up the slope, and the particle accelerates up the plane at $1.2\ \text{m s}^{-2}$.

(a) Show that $P = \dfrac{12.2}{\cos\beta}$. [3 marks]

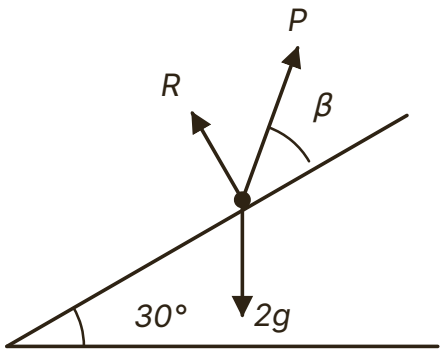

Answer .....

© 2026 Mathswariz. All rights reserved. Free for personal and classroom use. Not to be sold or republished.

(b) Show that the normal reaction is $R = 16.97 - 12.2\tan\beta$. [3 marks]

Answer .....

(c) Find the greatest value of β for which the particle stays in contact with the plane. [3 marks]

Answer .....

Total for D5: 9 marks

© 2026 Mathswariz. All rights reserved. Free for personal and classroom use. Not to be sold or republished.

D6 A particle is released from rest on a smooth plane inclined at an angle α to the horizontal. It slides $2.4\ \text{m}$ down the line of greatest slope in $1.2\ \text{s}$.

(a) Find the acceleration of the particle and the value of α. [4 marks]

Answer .....

(b) The particle has mass $1.5\ \text{kg}$. Find the normal reaction. [2 marks]

Answer .....

Total for D6: 6 marks

© 2026 Mathswariz. All rights reserved. Free for personal and classroom use. Not to be sold or republished.

E Extension

Stretch

No route is given. The hints are at the end of the sheet. Use one at a time.

E1 A particle is projected from a point O up the line of greatest slope of a smooth plane inclined at an angle α to the horizontal, where $\tan\alpha = \frac{3}{4}$. It passes a point B, further up the plane, at times 0.5 s and 2.3 s after projection. Find the speed of projection, the distance OB, the speed of the particle at B, and the greatest distance of the particle from O. [8 marks]

Answer .....

© 2026 Mathswariz. All rights reserved. Free for personal and classroom use. Not to be sold or republished.

Extension hints

Cover these with paper. Uncover one at a time.

E1

Hint 1 $\sin\alpha = \frac{3}{5}$, so the acceleration is $\frac{3g}{5}$ down the plane all the time, on the way up and on the way down.

Hint 2 The motion up and back is symmetric: the particle is highest halfway between the two times it passes B, at $1.4\ \text{s}$, where its velocity is 0.

Hint 3 Use $v = u - at$ with $v = 0$ at $t = 1.4$ to find u, then $s = ut - \frac{1}{2}at^2$ at $t = 0.5$.

How did it go?

Colour one circle on each line: not yet, nearly, yes.

I can resolve the weight of a particle parallel and perpendicular to an inclined plane.	○ ○ ○
I can find the normal reaction and the acceleration when other forces act along, horizontally or at an angle to the plane.	○ ○ ○
I can solve problems where a particle is projected up a smooth slope or driven against a resistance.	○ ○ ○
I can find the angle of a plane, or a condition on a force, from information about the motion.	○ ○ ○

© 2026 Mathswariz. All rights reserved. Free for personal and classroom use. Not to be sold or republished.