Resolving forces

116 marks

Hints online, answers free with an account: mathswariz.uk/worksheets/a-level-mechanics-year-2-resolving-forces/

Date

A Do Now

Quick questions to start. Some use earlier lessons; some set a slip that costs marks.

A1 Needed today [3 marks]

Two forces, $(3\mathbf{i} - 4\mathbf{j})$ N and $(5\mathbf{i} + 10\mathbf{j})$ N, act on a particle. Find the magnitude of their resultant and the angle it makes with $\mathbf{i}$.

Answer .....

A2 Needed today [2 marks]

A triangle has two sides of length 7 cm and 9 cm, with an angle of $120°$ between them. Find the length of the third side.

Answer .....

A3 Common slip [2 marks]

A force of 20 N acts at $35°$ to the upward vertical. Find its horizontal component and its vertical component.

Answer .....

A4 Needed today [2 marks]

An angle α is acute and $\tan\alpha = \frac{5}{12}$. Write down the exact values of $\sin\alpha$ and $\cos\alpha$.

Answer .....

© 2026 Mathswariz. All rights reserved. Free for personal and classroom use. Not to be sold or republished.

B Example, then your turn

A-Level

Your teacher works through each example with you. Then try the one beside it.

EXAMPLE 1

Two forces act on a particle: P, of magnitude $12\ \text{N}$, at $35°$ above the positive x-direction, and Q, of magnitude $20\ \text{N}$, at $20°$ to the negative y-direction, as shown. Write each force in the form $(p\mathbf{i} + q\mathbf{j})\ \text{N}$, and find the sum of the components in the $\mathbf{i}$ and $\mathbf{j}$ directions.

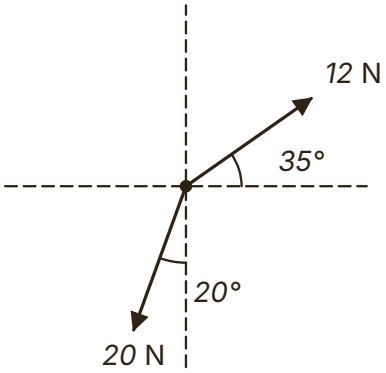

Hint The component in a direction is $F\cos\theta$, where θ is the angle between the force and that direction. For Q the angle given is to the vertical, so its horizontal part uses sine.

B1 Two forces act on a particle: $16\ \text{N}$ at $50°$ above the negative x-direction, and $9\ \text{N}$ at $30°$ below the positive x-direction. Write each force in the form $(p\mathbf{i} + q\mathbf{j})\ \text{N}$, and find the sum of the components in the $\mathbf{i}$ and $\mathbf{j}$ directions. [4 marks]

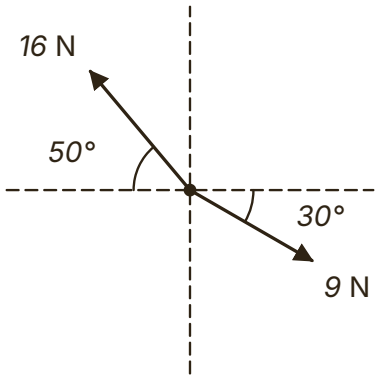

Answer .....

© 2026 Mathswariz. All rights reserved. Free for personal and classroom use. Not to be sold or republished.

EXAMPLE 2

Three forces act on a particle: $10\ \mathrm{N}$ in the direction of $\mathbf{i}$, $14\ \mathrm{N}$ at $60°$ to $\mathbf{i}$, and $8\ \mathrm{N}$ at $135°$ to $\mathbf{i}$, all angles measured anticlockwise from $\mathbf{i}$. Find the magnitude of the resultant force and the angle it makes with $\mathbf{i}$.

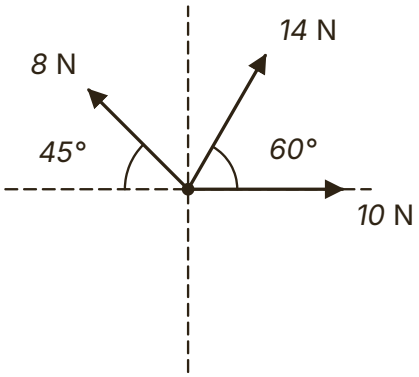

Hint Add the $\mathbf{i}$-components and the $\mathbf{j}$-components separately, then use Pythagoras and $\tan$. Sketch the resultant to see which quadrant it is in.

B2 Three forces act on a particle: $25\ \mathrm{N}$ at $15°$ above the positive x-direction, $12\ \mathrm{N}$ vertically upwards, and $18\ \mathrm{N}$ at $30°$ below the negative x-direction. Find the magnitude of the resultant force and the angle it makes with the positive x-direction. [5 marks]

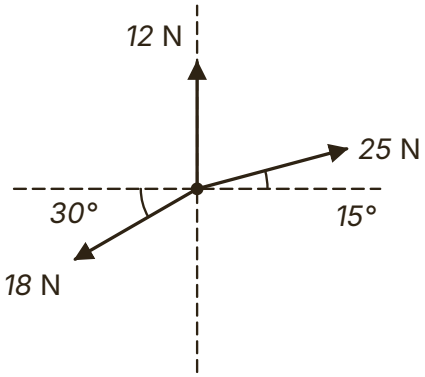

Answer .....

© 2026 Mathswariz. All rights reserved. Free for personal and classroom use. Not to be sold or republished.

EXAMPLE 3

Two forces, of magnitudes $9\ \mathrm{N}$ and $14\ \mathrm{N}$, act on a particle. The angle between their directions is $70°$. Use the triangle law to find the magnitude of the resultant and the angle it makes with the $9\ \mathrm{N}$ force.

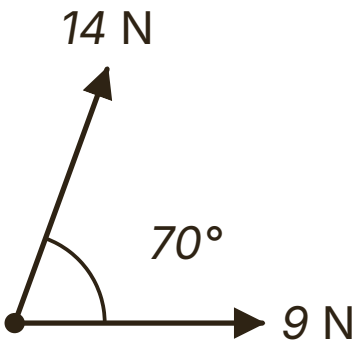

Hint Draw the $14\ \mathrm{N}$ force from the end of the $9\ \mathrm{N}$ force. The angle inside the triangle is $180° - 70°$, not $70°$.

B3 Two forces, of magnitudes $11\ \mathrm{N}$ and $6\ \mathrm{N}$, act on a particle. The angle between their directions is $125°$. Find the magnitude of the resultant and the angle it makes with the $11\ \mathrm{N}$ force. [5 marks]

Answer .....

© 2026 Mathswariz. All rights reserved. Free for personal and classroom use. Not to be sold or republished.

EXAMPLE 4

A particle is in equilibrium under three forces: $40\ \text{N}$ at $30°$ above the positive x-direction, $25\ \text{N}$ at $50°$ above the negative x-direction, and a force of magnitude $P\ \text{N}$ acting at an angle θ below the negative x-direction. Find P and θ.

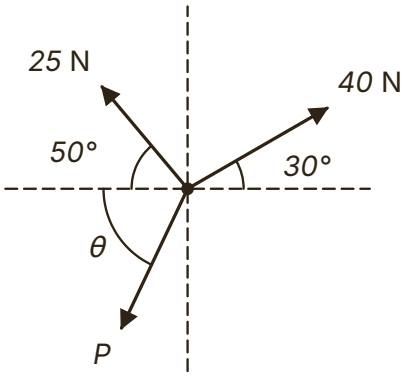

Hint In equilibrium the components in each direction add to zero. Write one equation for $P\cos\theta$ and one for $P\sin\theta$, then divide to get $\tan\theta$.

B4 A particle is in equilibrium under three forces: $36\ \text{N}$ in the positive x-direction, $50\ \text{N}$ at $110°$ to the positive x-direction (anticlockwise), and a force of magnitude $P\ \text{N}$ acting at an angle θ below the negative x-direction. Find P and θ. [6 marks]

Answer .....

© 2026 Mathswariz. All rights reserved. Free for personal and classroom use. Not to be sold or republished.

EXAMPLE 5

A box of mass $6\ \text{kg}$ lies on a smooth horizontal floor. It is pulled by a rope inclined at 25° above the horizontal, with tension $20\ \text{N}$, and it slides along the floor. Find the acceleration of the box, the normal reaction of the floor on the box, and the distance the box moves in the first $4\ \text{s}$ if it starts from rest.

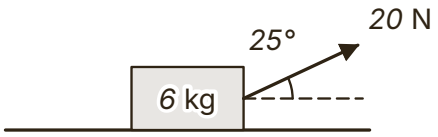

Hint Resolve horizontally for the equation of motion. Resolve vertically for the normal reaction: there is no vertical acceleration, and the rope pulls partly upwards.

B5 A box of mass $4\ \text{kg}$ lies on a smooth horizontal floor. A force of magnitude $P\ \text{N}$ pushes the box, acting at 30° below the horizontal, and the box accelerates along the floor at $1.5\ \text{m s}^{-2}$. Find P and the normal reaction of the floor on the box. [5 marks]

Answer .....

© 2026 Mathswariz. All rights reserved. Free for personal and classroom use. Not to be sold or republished.

C1 A force of $24\ \text{N}$ acts at 40° to the upward vertical, towards the positive x-direction. Sam writes its horizontal component as $24\cos 40^\circ = 18.4\ \text{N}$. Explain Sam's mistake. A second force of $10\ \text{N}$ acts in the negative x-direction. Find the resultant of the two forces in the form $(p\mathbf{i} + q\mathbf{j})\ \text{N}$ and its magnitude. [4 marks]

Answer .....

© 2026 Mathswariz. All rights reserved. Free for personal and classroom use. Not to be sold or republished.

C2 Forces of $8\ \mathrm{N}$ and $5\ \mathrm{N}$ act on a particle, with an angle of 60° between their directions. Mia writes $R^2 = 8^2 + 5^2 - 2(8)(5)\cos 60^\circ = 49$, so the resultant is $7\ \mathrm{N}$. Explain Mia's mistake. Find the magnitude of the resultant and the angle it makes with the $8\ \mathrm{N}$ force. [5 marks]

Answer .....

© 2026 Mathswariz. All rights reserved. Free for personal and classroom use. Not to be sold or republished.

C3 Two forces, $(-7\mathbf{i} + 3\mathbf{j})\ \text{N}$ and $(2\mathbf{i} - 9\mathbf{j})\ \text{N}$, act on a particle. Leo says the resultant has magnitude $\sqrt{58} + \sqrt{85} = 16.8\ \text{N}$ and that it makes an angle of $\tan^{-1}\frac{6}{5} = 50.2°$ with $\mathbf{i}$. Explain both mistakes, and find the correct magnitude and the angle between the resultant and $\mathbf{i}$. [5 marks]

Answer .....

© 2026 Mathswariz. All rights reserved. Free for personal and classroom use. Not to be sold or republished.

C4 A sledge of mass $15\ \text{kg}$ is pulled across horizontal ground by a rope inclined at $30°$ above the horizontal, with tension $40\ \text{N}$. It moves in a straight line with constant velocity against a constant horizontal resistance of magnitude $F\ \text{N}$. Ben writes "$40\cos 30° - F = 15a$ and the normal reaction is $15g = 147\ \text{N}$". Explain Ben's two mistakes, and find F and the normal reaction. [5 marks]

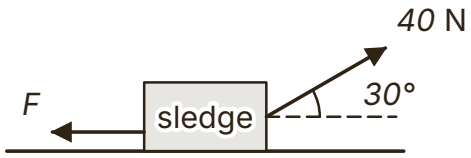

Answer .....

© 2026 Mathswariz. All rights reserved. Free for personal and classroom use. Not to be sold or republished.

D1

A parachutist of mass $75\ \text{kg}$ falls vertically with constant velocity. She is attached to her canopy by two lines, each with tension $T\ \text{N}$ and each at $55°$ to the horizontal, as shown. A vertical resistance to her motion, equal to one fifth of her weight, also acts on her. Pat writes: "$2T\cos 55° + 15g = 75g$, so $T = 513$."

Pat is wrong.

(a) Explain Pat's error. Show that $T = \dfrac{30g}{\sin 55°}$ and find T to 3 significant figures. [4 marks]

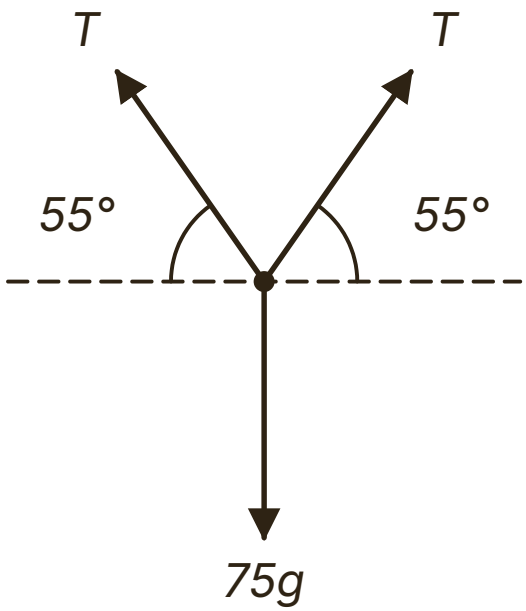

Answer .....

© 2026 Mathswariz. All rights reserved. Free for personal and classroom use. Not to be sold or republished.

(b) The lines are adjusted so that each makes an angle β with the horizontal, and the parachutist still falls with constant velocity. Explain why the tension in each line can never be less than $294\ \text{N}$. [3 marks]

Answer .....

(c) The parachutist is modelled as a particle. State what this means for the forces, and give one reason why the model may not be accurate. [2 marks]

Total for D1: 9 marks

© 2026 Mathswariz. All rights reserved. Free for personal and classroom use. Not to be sold or republished.

D2 A particle of mass $1.5\ \text{kg}$ is acted on by three forces only: a force of magnitude $P\ \text{N}$ at 40° above the positive x-direction, a force of magnitude $Q\ \text{N}$ at 25° above the negative x-direction, and its weight. The resultant of the three forces acts vertically upwards and has magnitude $6\ \text{N}$. Find P and Q, and the acceleration of the particle. [7 marks]

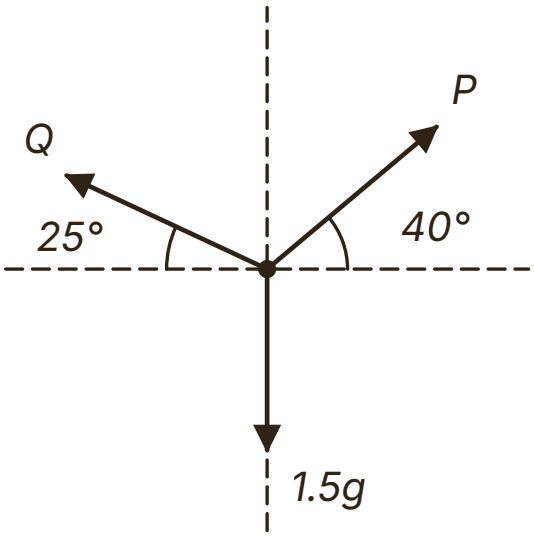

Answer .....

© 2026 Mathswariz. All rights reserved. Free for personal and classroom use. Not to be sold or republished.

D3 A box of mass $8\ \text{kg}$ is on a smooth horizontal floor. It is pulled by a light rope inclined at an angle α above the horizontal, where $\tan\alpha = \frac{3}{4}$. The tension in the rope is T N.

(a) Given that $T = 30$, find the acceleration of the box. [2 marks]

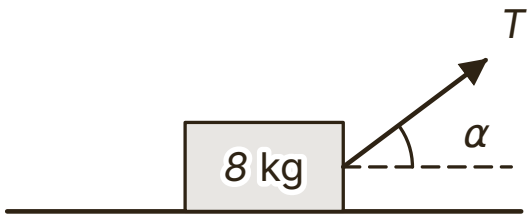

Answer .....

(b) Given that $T = 30$, find the normal reaction of the floor on the box. [2 marks]

Answer .....

© 2026 Mathswariz. All rights reserved. Free for personal and classroom use. Not to be sold or republished.

(c) Find the greatest value of T for which the box stays in contact with the floor, and the acceleration of the box when T takes this value. [4 marks]

Answer .....

(d) In practice the floor is not smooth. State how this would change your answer to part (a), and give one other limitation of the model. [2 marks]

Total for D3: 10 marks

© 2026 Mathswariz. All rights reserved. Free for personal and classroom use. Not to be sold or republished.

D4 A barge is pulled along a straight canal by two ropes, held by people walking on the two banks. The barge moves due east with constant velocity. Rope A has tension $320\ \text{N}$ and acts at 25° north of east. Rope B has tension $T\ \text{N}$ and acts at θ° south of east. The resistance to motion is a force of $750\ \text{N}$ acting due west. The barge is modelled as a particle and the ropes as horizontal.

(a) Explain why the equation for the forces along the canal has no "ma" term, and why the forces across the canal must also balance. [2 marks]

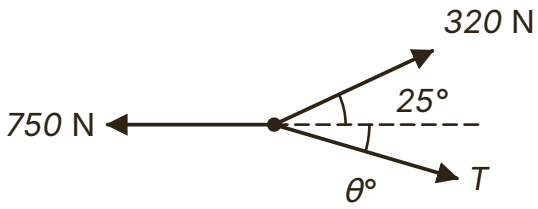

© 2026 Mathswariz. All rights reserved. Free for personal and classroom use. Not to be sold or republished.

(b) Find T and θ. [6 marks]

Answer .....

(c) Rope B is released. Immediately afterwards rope A and the resistance are unchanged. Find the magnitude of the resultant force on the barge, and explain why it equals your value of T. [3 marks]

Answer .....

Total for D4: 11 marks

© 2026 Mathswariz. All rights reserved. Free for personal and classroom use. Not to be sold or republished.

D5 Two forces act on a particle: one of magnitude $12\ \mathrm{N}$ and one of magnitude $P\ \mathrm{N}$. The angle between their directions is $150°$.

(a) Given that the resultant has magnitude $6\ \mathrm{N}$, show that there is only one possible value of P, and find it in the form $k\sqrt{3}$. [4 marks]

Answer .....

(b) Find the angle between the resultant and the $12\ \mathrm{N}$ force. [2 marks]

Answer .....

© 2026 Mathswariz. All rights reserved. Free for personal and classroom use. Not to be sold or republished.

(c) P keeps the value $6\sqrt{3}$, and the angle between the forces is changed to α, where $0^\circ \leq \alpha \leq 180^\circ$. Show that the magnitude R of the resultant satisfies $R^2 = 252 + 144\sqrt{3}\cos\alpha$, and hence find the greatest and least possible values of R. [4 marks]

Answer .....

Total for D5: 10 marks

© 2026 Mathswariz. All rights reserved. Free for personal and classroom use. Not to be sold or republished.

D6 A particle of mass $0.5\ \text{kg}$ moves on a smooth horizontal plane under three horizontal forces: $4\ \text{N}$ in the direction of $\mathbf{i}$, $6\ \text{N}$ at 120° to $\mathbf{i}$ (measured anticlockwise), and a force of magnitude $F\ \text{N}$. The particle accelerates at $2\ \text{m s}^{-2}$ in the direction of $\mathbf{j}$.

(a) Find F, and describe the direction of this force. [6 marks]

Answer .....

(b) The particle starts from rest. Find the distance it moves in the first $3\ \text{s}$. [2 marks]

Answer .....

Total for D6: 8 marks

© 2026 Mathswariz. All rights reserved. Free for personal and classroom use. Not to be sold or republished.

E Extension

Stretch

No route is given. The hints are at the end of the sheet. Use one at a time.

E1 Two forces, of magnitudes P N and $2P$ N, act on a particle, with an angle θ between their directions. When the resultant has magnitude $P\sqrt{7}$ N, find θ and the angle between the resultant and the force of magnitude $2P$ N. The angle between the two forces is then changed so that the resultant is perpendicular to the force of magnitude P N. Find the new angle between the forces, and the magnitude of the resultant in terms of P. [8 marks]

Answer .....

© 2026 Mathswariz. All rights reserved. Free for personal and classroom use. Not to be sold or republished.

Extension hints

Cover these with paper. Uncover one at a time.

E1

Hint 1 With the angle θ between the forces, $R^2 = P^2 + (2P)^2 + 2(P)(2P)\cos\theta$. Set this equal to $7P^2$.

Hint 2 For the direction, resolve along the $2P$ force and perpendicular to it.

Hint 3 "Perpendicular to the force P" means the resultant has no component along that force: $P + 2P\cos\theta = 0$.

How did it go?

Colour one circle on each line: not yet, nearly, yes.

I can find the component of a force in a given direction, including angles measured from the vertical.	○ ○ ○
I can find the magnitude and direction of a resultant by components or with the cosine and sine rules.	○ ○ ○
I can find an unknown force when a particle is in equilibrium or the resultant is given.	○ ○ ○
I can find the acceleration and the normal reaction when a force at an angle moves a body on a smooth floor.	○ ○ ○

© 2026 Mathswariz. All rights reserved. Free for personal and classroom use. Not to be sold or republished.