Static particles and modelling with statics

93 marks

Hints online, answers free with an account: mathswariz.uk/worksheets/a-level-mechanics-year-2-static-particles/

Date

© 2026 Mathswariz. All rights reserved. Free for personal and classroom use. Not to be sold or republished.

A Do Now

Quick questions to start. Some use earlier lessons; some set a slip that costs marks.

A1 Needed today [2 marks]

A force of $20\ \text{N}$ acts at 35° above the horizontal. Find its horizontal and vertical components.

Answer .....

A2 Common slip [3 marks]

A particle of mass $4\ \text{kg}$ rests on a smooth plane inclined at 25° to the horizontal. Find the component of its weight down the line of greatest slope and the component perpendicular to the plane. Which of these two is $4g\sin 25^\circ$?

Answer .....

A3 Needed today [2 marks]

In triangle XYZ, angle $X = 50^\circ$, angle $Y = 70^\circ$ and $YZ = 8\ \text{cm}$. Find XZ.

Answer .....

A4 Needed today [2 marks]

A particle is in equilibrium under the forces $(3\mathbf{i} + 2\mathbf{j})\ \text{N}$, $(p\mathbf{i} - 5\mathbf{j})\ \text{N}$ and $(-4\mathbf{i} + q\mathbf{j})\ \text{N}$. Find p and q.

Answer .....

© 2026 Mathswariz. All rights reserved. Free for personal and classroom use. Not to be sold or republished.

PART 1 Resolving forces on a particle

© 2026 Mathswariz. All rights reserved. Free for personal and classroom use. Not to be sold or republished.

EXAMPLE 1 · I DO

A particle is in equilibrium under the three forces shown: a force of 10 N at 40° above the horizontal (to the left), a force of P N at 20° above the horizontal (to the right), and its weight W N. Find P and W.

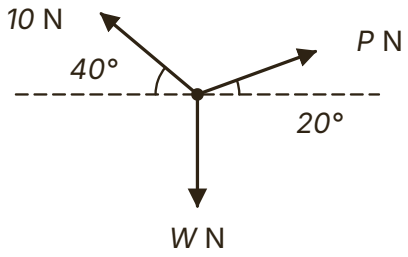

Hint No acceleration, so the resultant force is zero: the components in each direction add to zero. One equation has only P in it.

YOUR TURN · WE DO

B1 A particle is in equilibrium under three forces: 12 N at 50° above the horizontal (to the left), P N at 25° above the horizontal (to the right), and a vertical force of Q N downwards. Find P and Q. [5 marks]

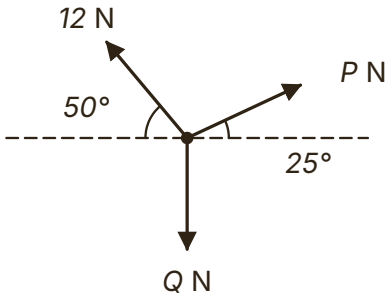

Answer .....

© 2026 Mathswariz. All rights reserved. Free for personal and classroom use. Not to be sold or republished.

EXAMPLE 2 · I DO

A particle is in equilibrium under four forces: $4\ \mathrm{N}$ horizontally to the left, $7\ \mathrm{N}$ vertically downwards, $2\ \mathrm{N}$ at 30° above the horizontal to the right, and $P\ \mathrm{N}$ at an angle θ above the horizontal to the right. Find P and θ.

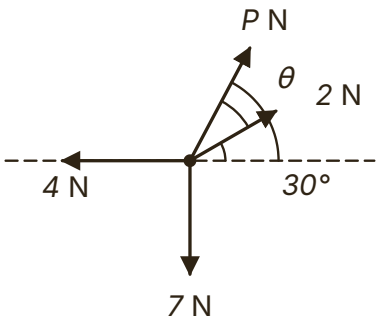

Hint Make $P\cos\theta$ the subject of one equation and $P\sin\theta$ of the other. Divide to get $\tan\theta$. Then square and add, or substitute back.

YOUR TURN · WE DO

© 2026 Mathswariz. All rights reserved. Free for personal and classroom use. Not to be sold or republished.

B2 A particle is in equilibrium under four forces: $6\ \mathrm{N}$ horizontally to the left, $9\ \mathrm{N}$ vertically downwards, $3\ \mathrm{N}$ at 20° below the horizontal to the right, and $P\ \mathrm{N}$ at an angle θ above the horizontal to the right. Find θ and P. [6 marks]

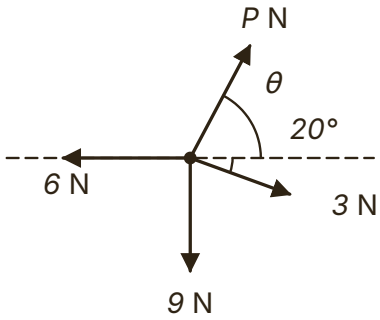

Answer .....

© 2026 Mathswariz. All rights reserved. Free for personal and classroom use. Not to be sold or republished.

C1 A box of weight $50\ \text{N}$ rests on a smooth horizontal floor. A force of $20\ \text{N}$ pushes on it at 30° below the horizontal, and a horizontal force of $Q\ \text{N}$ holds it at rest. Kai writes $R + 20\sin 30^\circ = 50$, so $R = 40\ \text{N}$. Explain his error. Find Q and R. [4 marks]

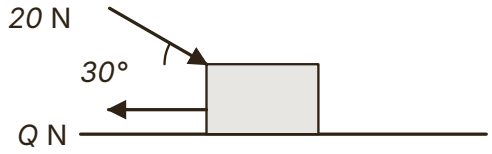

Answer .....

© 2026 Mathswariz. All rights reserved. Free for personal and classroom use. Not to be sold or republished.

C2 A particle of weight $9\ \mathrm{N}$ hangs on a light string from a fixed point. A horizontal force of magnitude $F\ \mathrm{N}$ holds it at rest with the string at an angle θ to the vertical. The tension in the string is $15\ \mathrm{N}$. Find θ and F. [4 marks]

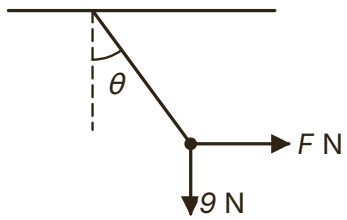

Not drawn accurately

Answer .....

© 2026 Mathswariz. All rights reserved. Free for personal and classroom use. Not to be sold or republished.

PART 2 Strings and the triangle of forces

EXAMPLE 3 · I DO

A particle of mass $2\ \text{kg}$ hangs at rest from two light inextensible strings fixed to a horizontal ceiling. The strings make angles of $30°$ and $50°$ with the ceiling. Find the tension in each string.

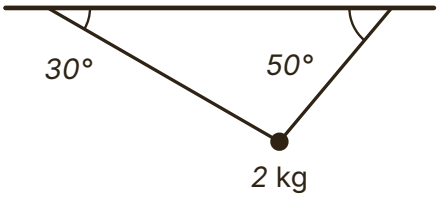

Hint Three forces in equilibrium make a closed triangle. Each angle of the triangle is $180°$ minus the angle between two of the forces. Or resolve horizontally and vertically.

YOUR TURN · WE DO

B3 A particle of mass $3\ \text{kg}$ hangs at rest from two light inextensible strings fixed to a horizontal ceiling. The strings make angles of $25°$ and $55°$ with the ceiling. Find the tension in each string. [5 marks]

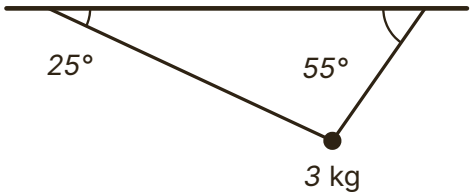

Answer .....

© 2026 Mathswariz. All rights reserved. Free for personal and classroom use. Not to be sold or republished.

C3 A picture of mass $4\ \text{kg}$ hangs from a small smooth nail by a light inextensible string fixed to two points on the top of the frame. Each part of the string makes 50° with the horizontal. (a) Find the tension in the string. (b) State how you used the fact that the nail is smooth. (c) Nia says that a shorter string, fixed to the same two points, would make the tension smaller. Is she right? Give a reason. [5 marks]

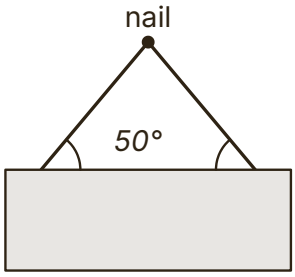

Answer .....

© 2026 Mathswariz. All rights reserved. Free for personal and classroom use. Not to be sold or republished.

C4 A particle of mass $5\ \text{kg}$ hangs at rest from two light inextensible strings fixed to a horizontal ceiling, making angles of $20°$ and $60°$ with the ceiling. Sam says the two strings share the weight equally, so each tension is $\frac{1}{2} \times 5g$ divided by the sine of its angle. Explain why Sam is wrong. Find the tension in each string. [5 marks]

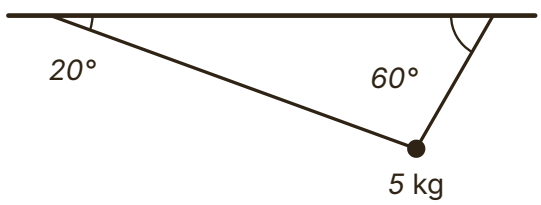

Answer .....

© 2026 Mathswariz. All rights reserved. Free for personal and classroom use. Not to be sold or republished.

C5 Three forces, of magnitudes $6\ \text{N}$, $8\ \text{N}$ and $F\ \text{N}$, act on a particle in equilibrium. The angle between the $6\ \text{N}$ and $8\ \text{N}$ forces is $70°$. Lee draws a triangle of forces and writes $F^2 = 6^2 + 8^2 - 2(6)(8)\cos 70°$, getting $F = 8.20$. Explain his error. Find F and the angle between the $6\ \text{N}$ force and the force F. [5 marks]

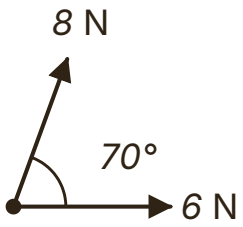

Answer .....

© 2026 Mathswariz. All rights reserved. Free for personal and classroom use. Not to be sold or republished.

PART 3 Forces on a smooth inclined plane

EXAMPLE 4 · I DO

A particle of mass $4\ \text{kg}$ is held at rest on a smooth plane inclined at 30° to the horizontal by a force of magnitude P N acting up a line of greatest slope. Find P and the normal reaction.

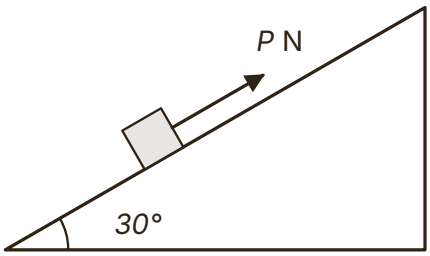

Hint Resolve parallel to the plane and then perpendicular to it. The force P has no component perpendicular to the plane.

YOUR TURN · WE DO

B4 A particle of mass $6\ \text{kg}$ is held at rest on a smooth plane inclined at 22° to the horizontal by a force of magnitude P N acting up a line of greatest slope. Find P and the normal reaction. [4 marks]

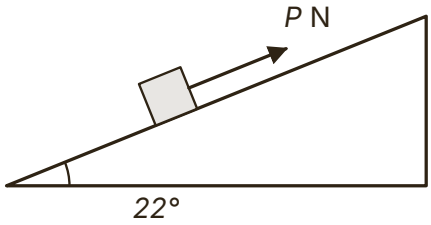

Answer .....

© 2026 Mathswariz. All rights reserved. Free for personal and classroom use. Not to be sold or republished.

EXAMPLE 5 · I DO

A particle of mass $5\ \text{kg}$ is held at rest on a smooth plane inclined at an angle α to the horizontal, where $\tan\alpha = \frac{3}{4}$, by a horizontal force of magnitude P N. The line of action of the force is in the vertical plane through a line of greatest slope. Find P and the normal reaction.

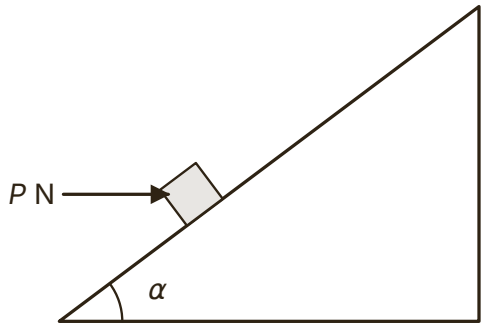

Hint Resolve parallel to the plane (no normal reaction in that equation), then perpendicular to the plane. The horizontal force has a component into the plane too. Use $\sin\alpha = \frac{3}{5}$, $\cos\alpha = \frac{4}{5}$.

YOUR TURN · WE DO

B5 A particle of mass $2.5\ \text{kg}$ is held at rest on a smooth plane inclined at $40°$ to the horizontal by a horizontal force of magnitude P N in the vertical plane through a line of greatest slope. Find P and the normal reaction. [5 marks]

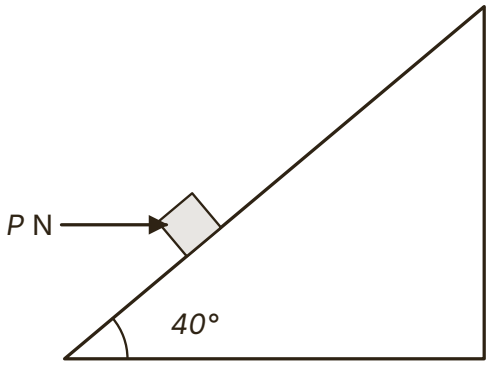

Answer .....

© 2026 Mathswariz. All rights reserved. Free for personal and classroom use. Not to be sold or republished.

C6 A particle A of mass $2\ \text{kg}$ rests on a smooth plane inclined at α to the horizontal, where $\tan\alpha = \frac{3}{4}$. A light inextensible string is attached to A and passes over a small smooth pulley P fixed above the plane. The part of the string from A to P makes an angle of 30° with the line of greatest slope through A, as shown. The other end of the string carries a particle B of mass $m\ \text{kg}$, which hangs freely. The system is at rest. Find the tension in the string and the value of m. [4 marks]

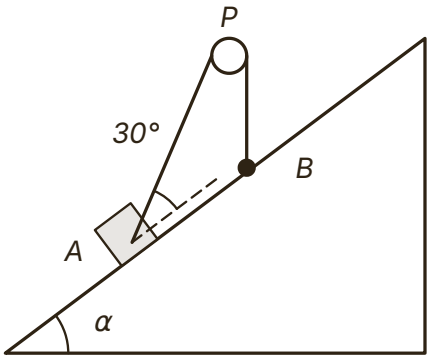

Answer .....

© 2026 Mathswariz. All rights reserved. Free for personal and classroom use. Not to be sold or republished.

C7 A particle of mass $3\ \text{kg}$ is held at rest on a smooth plane inclined at 35° to the horizontal by a horizontal force of magnitude $P\ \text{N}$. Jo writes $R = 3g\cos 35^\circ = 24.1\ \text{N}$. Explain her mistake. Find P and the correct normal reaction. [5 marks]

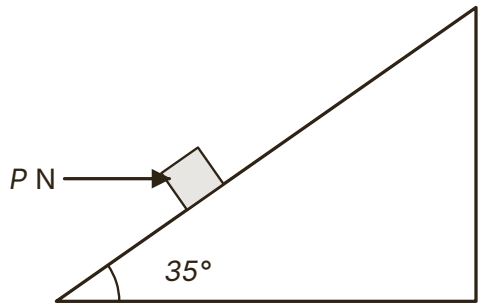

Answer .....

© 2026 Mathswariz. All rights reserved. Free for personal and classroom use. Not to be sold or republished.

D1 A particle of weight $12\ \text{N}$ rests on a smooth plane inclined at 25° to the horizontal. It is held at rest by a horizontal force of magnitude $4\ \text{N}$ and a force of magnitude $P\ \text{N}$ acting at an angle α above a line of greatest slope, as shown. Both forces act in the vertical plane through the line of greatest slope. The normal reaction between the particle and the plane has magnitude $9\ \text{N}$. Find P and α. [7 marks]

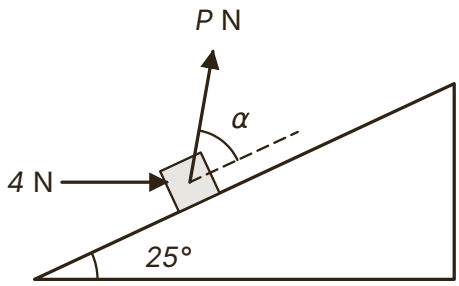

Answer .....

© 2026 Mathswariz. All rights reserved. Free for personal and classroom use. Not to be sold or republished.

D2

A particle of mass $4\ \text{kg}$ is held at rest on a smooth plane inclined at $25°$ to the horizontal by a force of magnitude $P\ \text{N}$ acting at $35°$ to a line of greatest slope, above the plane, in the vertical plane through that line. Lily writes: "$R = 4g\cos 25° = 35.5\ \text{N}$ and $P = 4g\sin 25° = 16.6\ \text{N}$."

Lily is wrong.

(a) Explain the two errors in Lily's working. [2 marks]

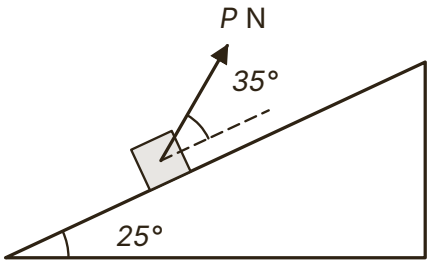

(b) Find P. [3 marks]

Answer .....

© 2026 Mathswariz. All rights reserved. Free for personal and classroom use. Not to be sold or republished.

(c) Find the normal reaction between the particle and the plane. [3 marks]

Answer .....

(d) The force is now made to act horizontally, still holding the particle at rest. Find the new value of P, and explain why the normal reaction is now greater than $4g\cos 25^\circ$. [3 marks]

Answer .....

Total for D2: 11 marks

© 2026 Mathswariz. All rights reserved. Free for personal and classroom use. Not to be sold or republished.

No route is given. The hints are at the end of the sheet. Use one at a time.

© 2026 Mathswariz. All rights reserved. Free for personal and classroom use. Not to be sold or republished.

E1 Two fixed points A and B are on a horizontal ceiling, $2.5\ \text{m}$ apart. A particle Q of mass $4\ \text{kg}$ is attached to A by a light inextensible string of length $1.5\ \text{m}$ and to B by a light inextensible string of length $2\ \text{m}$. A horizontal force of magnitude $H\ \text{N}$ is applied to Q, in the vertical plane through A and B, so that Q stays at rest in the position where both strings are taut. Find the greatest value of H when the force acts in the direction from A to B, and the greatest value of H when it acts in the direction from B to A. [9 marks]

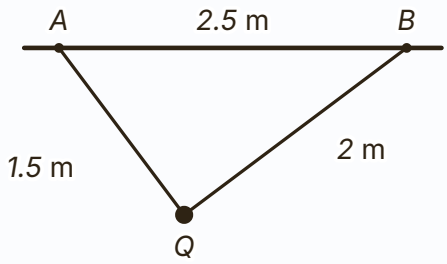

Answer .....

© 2026 Mathswariz. All rights reserved. Free for personal and classroom use. Not to be sold or republished.

Extension hints

Cover these with paper. Uncover one at a time.

E1

Hint 1 The lengths 1.5, 2 and 2.5 make a right-angled triangle, so the strings are perpendicular. Find the angle each string makes with the ceiling.

Hint 2 Resolve along each string. Because the strings are perpendicular, resolving along QA leaves out the tension in QB, and the other way round. Write each tension in terms of H.

Hint 3 A string is taut only while its tension is positive. Each tension gives one limit on H.

How did it go?

Colour one circle on each line: not yet, nearly, yes.

I can resolve forces in two perpendicular directions to find unknown forces and angles on a particle in equilibrium.	○ ○ ○
I can use a triangle of forces with the sine or cosine rule when three forces act.	○ ○ ○
I can find the force and the normal reaction for a particle held at rest on a smooth inclined plane.	○ ○ ○
I can use the modelling assumptions about strings, pulleys, pegs and rings in a statics problem.	○ ○ ○

© 2026 Mathswariz. All rights reserved. Free for personal and classroom use. Not to be sold or republished.