Horizontal circles and the conical pendulum

89 marks

Hints online, answers free with an account: mathswariz.uk/worksheets/ocr-further-maths-mech-horizontal-circles/

Date

A Do Now

Quick questions to start.

A1 From A-Level Maths [2 marks]

A force of $20\ \mathrm{N}$ acts at 30° to the upward vertical. Find its vertical and horizontal components.

Answer .....

A2 Last lesson [2 marks]

A particle moves in a horizontal circle of radius $0.5\ \mathrm{m}$ at $4\ \mathrm{rad\,s^{-1}}$. Find the magnitude of its acceleration.

Answer .....

A3 Needed today [2 marks]

θ is acute and $\cos\theta = 0.6$. Find the exact values of $\sin\theta$ and $\tan\theta$.

Answer .....

A4 Last lesson [2 marks]

Change 90 revolutions per minute to $\mathrm{rad\,s^{-1}}$, as a multiple of π.

Answer .....

B Examples and practice

A-Level Further

Your teacher works each example with you (I do). You try the one beside it together (We do). Then practise that part on your own (You do).

© 2026 Mathswariz. All rights reserved. Free for personal and classroom use. Not to be sold or republished.

PART 1 The conical pendulum

EXAMPLE 1 · I DO

A particle P of mass $0.5\ \text{kg}$ hangs from a fixed point O on a light inextensible string of length $0.8\ \text{m}$. P moves in a horizontal circle with the string at 30° to the vertical. Find the tension and the angular speed.

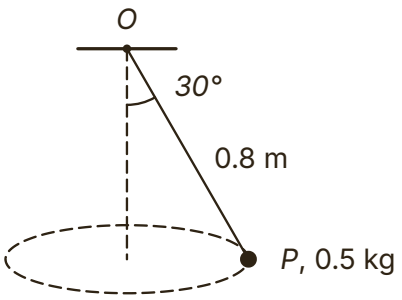

Hint Resolve vertically: $T\cos\theta = mg$, so the tension is bigger than the weight. Horizontally: $T\sin\theta = mr\omega^2$ with radius $r = l\sin\theta$, not l.

YOUR TURN · WE DO

B1 A particle of mass $0.3\ \text{kg}$ moves as a conical pendulum on a light string of length $1.2\ \text{m}$, with the string at 40° to the vertical. Find the tension, the angular speed and the speed of the particle. [3 marks]

Answer .....

© 2026 Mathswariz. All rights reserved. Free for personal and classroom use. Not to be sold or republished.

EXAMPLE 2 · I DO

A particle of mass $0.2\ \text{kg}$ moves as a conical pendulum on a light string of length $0.5\ \text{m}$, at a constant $6\ \text{rad}\,\text{s}^{-1}$. Find the tension, and the angle the string makes with the vertical.

Hint With $r = l\sin\theta$, the horizontal equation $T\sin\theta = m(l\sin\theta)\omega^2$ gives $T = ml\omega^2$ straight away. Then use the vertical equation for the angle.

YOUR TURN · WE DO

B2 A particle of mass $0.25\ \text{kg}$ moves as a conical pendulum on a light string of length $0.9\ \text{m}$, at $5\ \text{rad}\,\text{s}^{-1}$. Find the tension, the angle between the string and the vertical, and the radius of the circle. [4 marks]

Answer .....

© 2026 Mathswariz. All rights reserved. Free for personal and classroom use. Not to be sold or republished.

C1 A particle of mass $0.35\ \text{kg}$ moves as a conical pendulum on a light string of length $0.6\ \text{m}$. It makes one revolution every $1.2\ \text{s}$. Find the tension in the string and the angle the string makes with the vertical. [4 marks]

Answer .....

C2 A particle of mass $0.6\ \text{kg}$ moves as a conical pendulum on a light string of length $1.1\ \text{m}$, with the string at $35°$ to the vertical. Sam writes: "Resolving, $T = mg\cos 35° = 4.82\ \text{N}$." Explain Sam's mistake. Find the correct tension and the angular speed. [5 marks]

Answer .....

© 2026 Mathswariz. All rights reserved. Free for personal and classroom use. Not to be sold or republished.

PART 2 Friction on a turntable

EXAMPLE 3 · I DO

A small block of mass $0.2\ \text{kg}$ sits on a rough horizontal turntable, $0.15\ \text{m}$ from the centre, and turns with it. The friction force on the block cannot be more than $0.9\ \text{N}$. Find the greatest angular speed at which the block does not slip.

Hint Friction is the only horizontal force, so friction $= mr\omega^2$ towards the centre. The weight and the normal contact force are vertical and cancel.

YOUR TURN · WE DO

B3 A coin of mass $0.05\ \text{kg}$ sits $0.12\ \text{m}$ from the centre of a record turntable turning at 45 rev/min. Find the friction force on the coin. The friction force can be at most $0.2\ \text{N}$. Find the greatest distance from the centre at which the coin would not slip at this speed. [4 marks]

Answer .....

© 2026 Mathswariz. All rights reserved. Free for personal and classroom use. Not to be sold or republished.

C3 Two coins, each of mass $0.03\ \text{kg}$, sit on a rough horizontal turntable at $0.1\ \text{m}$ and $0.2\ \text{m}$ from the centre. The friction force on each coin can be at most $0.12\ \text{N}$. The turntable speeds up slowly from rest. Find which coin slips first, and the angular speed at which each coin starts to slip. [4 marks]

Answer .....

C4 A child of mass $30\ \text{kg}$ sits $1.5\ \text{m}$ from the centre of a horizontal roundabout, which turns at 18 revolutions per minute. The friction force on the child can be at most $150\ \text{N}$.

(a) Find the angular speed of the roundabout. [2 marks]

Answer .....

© 2026 Mathswariz. All rights reserved. Free for personal and classroom use. Not to be sold or republished.

(b) Show that the child will slide. [3 marks]

(c) Find the greatest distance from the centre at which the child could sit without sliding. [3 marks]

Answer .....

(d) State one assumption you have made about the child, and how it affects your answer to part (c). [2 marks]

Total for C4: 10 marks

© 2026 Mathswariz. All rights reserved. Free for personal and classroom use. Not to be sold or republished.

PART 3 Two strings, or a string and a table

EXAMPLE 4 · I DO

Fixed points A and B are on a vertical axis, with A above B. A particle P of mass $0.5\ \text{kg}$ is joined to A and to B by light inextensible strings, each of length $1\ \text{m}$, and $AB = 1.2\ \text{m}$. P moves in a horizontal circle at $5\ \text{rad s}^{-1}$ with both strings taut. Find the tension in each string.

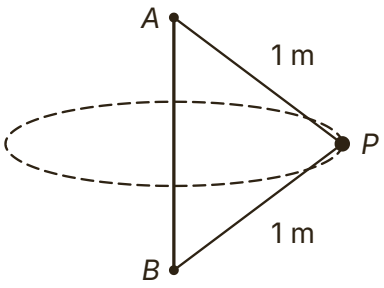

Hint P is $0.6\ \text{m}$ below A and $0.8\ \text{m}$ from the axis, so each string makes an angle with $\cos = 0.6$ and $\sin = 0.8$ to the vertical. AP pulls up and in; BP pulls down and in.

YOUR TURN · WE DO

B4 Fixed points A and B are on a vertical axis with A above B and $AB = 2.1\ \text{m}$. A particle P of mass $0.3\ \text{kg}$ is joined to A by a light string of length $1.3\ \text{m}$ and to B by a light string of length $2\ \text{m}$. P moves in a horizontal circle of radius $1.2\ \text{m}$ at $5\ \text{rad s}^{-1}$, with both strings taut. Find the tension in each string. [5 marks]

Answer .....

© 2026 Mathswariz. All rights reserved. Free for personal and classroom use. Not to be sold or republished.

C5 Fixed points A and B are on a vertical axis with A above B and $AB = 1.4\ \text{m}$. A particle P of mass $0.4\ \text{kg}$ is joined to A by a light string of length $1.5\ \text{m}$ and to B by a light string of length $1.3\ \text{m}$. P moves in a horizontal circle of radius $1.2\ \text{m}$.

(a) Find the least angular speed for which BP is taut. [2 marks]

Answer .....

(b) Find the tension in each string when $\omega = 4\ \text{rad}\,\text{s}^{-1}$. [3 marks]

Answer .....

Total for C5: 5 marks

© 2026 Mathswariz. All rights reserved. Free for personal and classroom use. Not to be sold or republished.

C6 A particle P of mass $0.5\ \text{kg}$ moves on a smooth horizontal table in a circle of radius $0.6\ \text{m}$. It is attached to a light inextensible string of length $1\ \text{m}$, whose other end is fixed at O, $0.8\ \text{m}$ above the centre of the circle. P moves with angular speed ω.

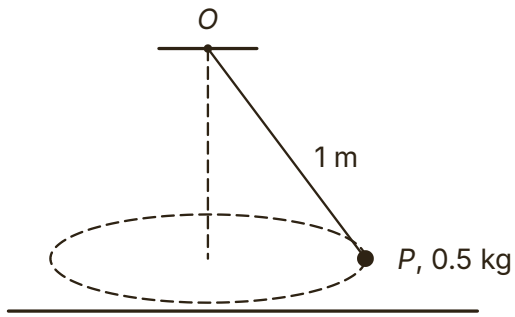

(a) Show that the tension in the string is $0.5\omega^2\ \text{N}$. [3 marks]

(b) Find the normal contact force between P and the table when $\omega = 3\ \text{rad}\,\text{s}^{-1}$. [3 marks]

Answer .....

© 2026 Mathswariz. All rights reserved. Free for personal and classroom use. Not to be sold or republished.

(c) Find the greatest angular speed for which P stays on the table. Explain your method. [4 marks]

Answer .....

Total for C6: 10 marks

D Exam-style questions

OCR exam style

D1

> Alex says: "If the particle goes fast enough, the string will become horizontal."

A particle of mass $0.5\ \text{kg}$ moves as a conical pendulum on a light string of length $0.8\ \text{m}$, with angular speed ω.

(a) Show that $\cos\theta = \dfrac{g}{0.8\omega^2}$, where θ is the angle between the string and the vertical. [3 marks]

© 2026 Mathswariz. All rights reserved. Free for personal and classroom use. Not to be sold or republished.

(b) Find the angular speed when the string is at 60° to the vertical. [2 marks]

Answer .....

(c) Explain why Alex is wrong. [2 marks]

(d) Show that the particle cannot move as a conical pendulum with $\omega = 3\ \text{rad}\,\text{s}^{-1}$. [2 marks]

Total for D1: 9 marks

© 2026 Mathswariz. All rights reserved. Free for personal and classroom use. Not to be sold or republished.

D2 A particle P of mass $0.8\ \text{kg}$ moves as a conical pendulum on a light inextensible string of length $1.25\ \text{m}$ fixed at O. The string makes an angle θ with the vertical, where $\cos\theta = 0.8$.

(a) Show that the tension in the string is $9.8\ \text{N}$. [2 marks]

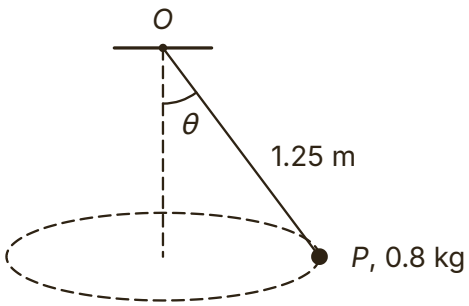

(b) Find the angular speed and the speed of P. [4 marks]

Answer .....

© 2026 Mathswariz. All rights reserved. Free for personal and classroom use. Not to be sold or republished.

(c) The string breaks if the tension exceeds $30\ \mathrm{N}$. The angular speed is increased slowly. Find the greatest possible angular speed, and the angle between the string and the vertical at that speed. [4 marks]

Answer .....

Total for D2: 10 marks

© 2026 Mathswariz. All rights reserved. Free for personal and classroom use. Not to be sold or republished.

E Extension

Stretch

No route is given. The hints are at the end of the sheet. Use one at a time.

E1 A light inextensible string of length $1.5\ \text{m}$ passes through a small smooth fixed ring. Particle Q of mass $0.5\ \text{kg}$ hangs at rest on one end, vertically below the ring. Particle P of mass $0.3\ \text{kg}$ on the other end moves as a conical pendulum below the ring at $5\ \text{rad}\,\text{s}^{-1}$. Find how far below the ring Q hangs, and the angle the string to P makes with the vertical. Find the least angular speed for which this motion is possible. [8 marks]

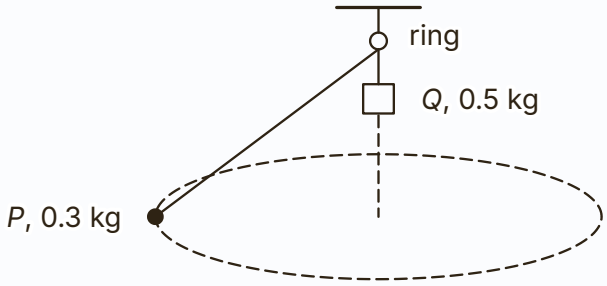

Answer .....

© 2026 Mathswariz. All rights reserved. Free for personal and classroom use. Not to be sold or republished.

Extension hints

Cover these with paper. Uncover one at a time.

E1

Hint 1 The ring is smooth, so the tension is the same on both sides. What does Q tell you about it?

Hint 2 For a conical pendulum the horizontal equation gives $T = ml\omega^2$, where l is the length of string from the ring to P.

Hint 3 As ω falls, l gets longer. The string to P cannot be longer than the whole string.

How did it go?

Colour one circle on each line: not yet, nearly, yes.

I can resolve vertically to balance the weight and horizontally to give $mr\omega^2$ towards the centre.	○ ○ ○
I can find the tension, the angle or the speed of a conical pendulum, using $r = l\sin\theta$.	○ ○ ○
I can work with two strings, a friction force or a contact force, and say when a string goes slack or a particle leaves a surface.	○ ○ ○
I can use exact trig from a 3-4-5 or 5-12-13 triangle.	○ ○ ○

© 2026 Mathswariz. All rights reserved. Free for personal and classroom use. Not to be sold or republished.