The work-energy principle with resistance

89 marks

Hints online, answers free with an account: mathswariz.uk/worksheets/ocr-further-maths-mech-work-energy/

Date

A Do Now

Quick questions to start.

A1 Last lesson [2 marks]

Find the kinetic energy of a $1.5\ \text{kg}$ ball moving at $6\ \text{m s}^{-1}$.

Answer .....

A2 Last lesson [2 marks]

A box slides from rest down a smooth slope and drops $2.5\ \text{m}$ vertically. Find its speed.

Answer .....

A3 From A-Level Maths [2 marks]

A $4\ \text{kg}$ block on a horizontal floor is pulled by a horizontal force of $20\ \text{N}$. Friction is $6\ \text{N}$. Find its acceleration.

Answer .....

A4 Last lesson [2 marks]

A sledge moves $8\ \text{m}$ against a constant resistance of $15\ \text{N}$. Find the work done against the resistance.

Answer .....

B Examples and practice

A-Level Further

Your teacher works each example with you (I do). You try the one beside it together (We do). Then practise that part on your own (You do).

© 2026 Mathswariz. All rights reserved. Free for personal and classroom use. Not to be sold or republished.

PART 1 Resistance on a level surface

EXAMPLE 1 · I DO

A car of mass $900\ \text{kg}$ brakes on a level road, slowing from $20\ \text{m s}^{-1}$ to $8\ \text{m s}^{-1}$ over $60\ \text{m}$. Find the braking force, assumed constant.

Hint Work done by the braking force = loss of KE. Both speeds go in: the car was moving at the start.

YOUR TURN · WE DO

B1 A cyclist and bicycle, of total mass $80\ \text{kg}$, freewheel along a level road. Their speed falls from $9\ \text{m s}^{-1}$ to $5\ \text{m s}^{-1}$ over $40\ \text{m}$. Find the resistance, assumed constant. [4 marks]

Answer .....

© 2026 Mathswariz. All rights reserved. Free for personal and classroom use. Not to be sold or republished.

EXAMPLE 2 · I DO

A bullet of mass $0.02\ \text{kg}$ hits a fixed block of wood at $400\ \text{m s}^{-1}$ and stops after travelling $0.15\ \text{m}$ into it. Find the average resistance of the wood.

Hint All the KE goes in work against the resistance over $0.15\ \text{m}$.

YOUR TURN · WE DO

B2 A bullet of mass $0.015\ \text{kg}$ passes through a fixed board $4\ \text{cm}$ thick. It enters at $350\ \text{m s}^{-1}$ and leaves at $150\ \text{m s}^{-1}$. Find the average resistance of the board. [4 marks]

Answer .....

© 2026 Mathswariz. All rights reserved. Free for personal and classroom use. Not to be sold or republished.

C1 A $1200\ \text{kg}$ car slows from $25\ \text{m s}^{-1}$ to $15\ \text{m s}^{-1}$ over $100\ \text{m}$ on a level road. Sam writes: [4 marks]

$$\tfrac{1}{2} \times 1200 \times 15^2 = 135\,000, \text{ so the resistance is } \frac{135\,000}{100} = 1350\ \text{N}.$$

Explain Sam's mistake and find the resistance.

Answer .....

C2 A $1500\ \text{kg}$ car speeds up along a level road from $10\ \text{m s}^{-1}$ to $20\ \text{m s}^{-1}$. The engine does $400\ \text{kJ}$ of work. The resistance changes as the car speeds up. Find the work done against the resistance, and explain why suvat could not be used to find the distance travelled. [4 marks]

Answer .....

© 2026 Mathswariz. All rights reserved. Free for personal and classroom use. Not to be sold or republished.

PART 2 Driving forces and air resistance

EXAMPLE 3 · I DO

A $50\ \text{kg}$ crate is pushed from rest across a level floor by a horizontal force of $120\ \text{N}$. The resistance is $40\ \text{N}$. Use energy to find its speed after $15\ \text{m}$.

Hint Work done by the push minus work done against the resistance = gain in KE.

YOUR TURN · WE DO

B3 A $30\ \text{kg}$ sledge moves at $2\ \text{m s}^{-1}$ on level snow. It is then pulled $20\ \text{m}$ by a rope at $25°$ above the horizontal with tension $70\ \text{N}$, against a resistance of $35\ \text{N}$. Use energy to find its speed after the $20\ \text{m}$. [4 marks]

Answer .....

© 2026 Mathswariz. All rights reserved. Free for personal and classroom use. Not to be sold or republished.

C3 A ball of mass $0.3\ \text{kg}$ is thrown vertically upwards at $15\ \text{m s}^{-1}$. On the way up the air resistance does $8\ \text{J}$ of work against it. Find the greatest height the ball reaches above the point of throwing. [4 marks]

Answer .....

C4 A lorry of mass $12\,000\ \text{kg}$ climbs $800\ \text{m}$ along a road, rising $40\ \text{m}$. Its speed falls from $15\ \text{m s}^{-1}$ to $10\ \text{m s}^{-1}$. The resistance is $3000\ \text{N}$ throughout. Find the work done by the driving force. [5 marks]

Answer .....

© 2026 Mathswariz. All rights reserved. Free for personal and classroom use. Not to be sold or republished.

C5 A ball of mass $0.4\ \mathrm{kg}$ is thrown vertically upwards from the ground at $18\ \mathrm{m\,s^{-1}}$ and reaches a greatest height of $14\ \mathrm{m}$. Modelling the air resistance as a constant force, find the air resistance and the speed with which the ball returns to the ground. [6 marks]

Answer .....

© 2026 Mathswariz. All rights reserved. Free for personal and classroom use. Not to be sold or republished.

PART 3 Curved paths and rough slopes

© 2026 Mathswariz. All rights reserved. Free for personal and classroom use. Not to be sold or republished.

EXAMPLE 4 · I DO

A child of mass $25\ \text{kg}$ slides from rest down a curved slide. The slide is $6\ \text{m}$ long and drops $3\ \text{m}$. A constant resistance of $20\ \text{N}$ acts along the slide. Find her speed at the bottom.

Hint The resistance acts along the whole path, so its work is 20×6, the length of the slide. Gravity only needs the drop.

YOUR TURN · WE DO

B4 A bead of mass $0.1\ \text{kg}$ slides on a wire bent into a quarter of a circle of radius $2\ \text{m}$, in a vertical plane. It starts from rest level with the centre and slides to the lowest point. A constant resistance of $0.2\ \text{N}$ acts along the wire. Find its speed at the lowest point. [5 marks]

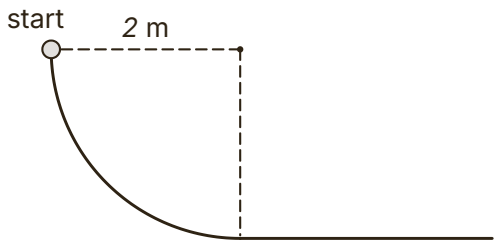

Answer .....

© 2026 Mathswariz. All rights reserved. Free for personal and classroom use. Not to be sold or republished.

EXAMPLE 5 · I DO

A $5\ \text{kg}$ block is projected up a line of greatest slope of a rough plane inclined at $30°$, with speed $8\ \text{m s}^{-1}$. Friction is $12\ \text{N}$. Find how far up the plane it travels.

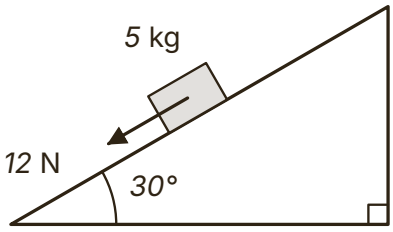

Hint At a distance d up the slope it has risen $d\sin 30°$ and done $12d$ against friction. Friction times the distance along the slope, not the height.

YOUR TURN · WE DO

B5 A $2\ \text{kg}$ particle is projected up a line of greatest slope of a rough plane inclined at $20°$, with speed $6\ \text{m s}^{-1}$. Friction is $4\ \text{N}$ throughout. (i) Find how far up the plane it travels. (ii) It then slides back down. Find its speed when it passes its starting point. [5 marks]

Answer .....

© 2026 Mathswariz. All rights reserved. Free for personal and classroom use. Not to be sold or republished.

C6 A $4\ \text{kg}$ box slides from rest $5\ \text{m}$ down a rough slope inclined at $35°$. Friction is $10\ \text{N}$. Find its speed at the end. [4 marks]

Answer .....

C7 A $60\ \text{kg}$ skier starts from rest and travels $120\ \text{m}$ down a slope, dropping $45\ \text{m}$ vertically. She reaches $21\ \text{m s}^{-1}$. (i) Find the average resistance. (ii) The resistance is modelled as constant. Give a reason why this is not realistic. [4 marks]

Answer .....

© 2026 Mathswariz. All rights reserved. Free for personal and classroom use. Not to be sold or republished.

D1 A particle of mass $3\ \text{kg}$ is projected from A up a line of greatest slope of a rough plane inclined at $25°$, with speed $10\ \text{m s}^{-1}$. Friction is $9\ \text{N}$ throughout the motion.

(a) Show that the particle travels $7.00\ \text{m}$ up the plane, to 3 significant figures. [3 marks]

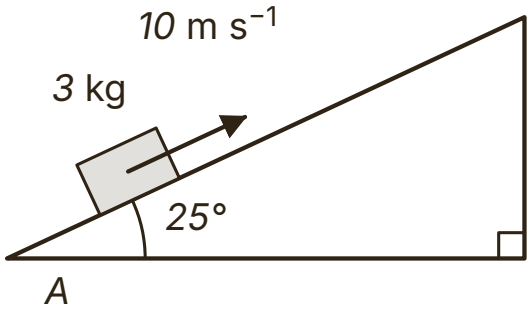

(b) Hence find the speed of the particle when it returns to A. [3 marks]

Answer .....

© 2026 Mathswariz. All rights reserved. Free for personal and classroom use. Not to be sold or republished.

(c) Find the total work done against friction from leaving A to returning to A. [2 marks]

Answer .....

(d) Explain why the particle returns to A with less speed than it left with. [2 marks]

Total for D1: 10 marks

© 2026 Mathswariz. All rights reserved. Free for personal and classroom use. Not to be sold or republished.

D2

> Alex writes: “The work done against gravity from A to B is $2000 \times 9.8 \times 250 = 4.9\ \text{MJ}$.”

A van of mass $2000\ \text{kg}$ is driven up a straight road inclined at α to the horizontal, where $\sin\alpha = \dfrac{1}{20}$. The driving force is $3000\ \text{N}$ and the resistance is $800\ \text{N}$, both constant. The van passes A at $10\ \text{m s}^{-1}$ and B, $250\ \text{m}$ further up the road.

(a) Explain Alex's mistake. [2 marks]

(b) Find the work done against gravity from A to B. [2 marks]

Answer .....

(c) Hence find the speed of the van at B. [3 marks]

Answer .....

© 2026 Mathswariz. All rights reserved. Free for personal and classroom use. Not to be sold or republished.

(d) At B the driving force is removed. Find how much further up the road the van travels before it stops. [3 marks]

Answer .....

Total for D2: 10 marks

© 2026 Mathswariz. All rights reserved. Free for personal and classroom use. Not to be sold or republished.

E Extension

Stretch

No route is given. The hints are at the end of the sheet. Use one at a time.

E1 A block of mass m is projected with speed u up a line of greatest slope of a rough plane inclined at $30°$. Friction is a constant force F. The block comes to rest and slides back, passing its starting point with speed $\frac{1}{2}u$. Show that $F = 0.3mg$. Given that $m = 2$ and $u = 12$, find how far up the plane the block travels. [8 marks]

Answer .....

© 2026 Mathswariz. All rights reserved. Free for personal and classroom use. Not to be sold or republished.

Extension hints

Cover these with paper. Uncover one at a time.

E1

Hint 1 Write one energy equation for the way up and one for the way down. The same distance d appears in both.

Hint 2 On the way up friction acts down the slope with the weight; on the way down it acts up the slope, against the weight.

Hint 3 Divide one equation by the other so that m, u and d cancel, leaving an equation in F and mg.

How did it go?

Colour one circle on each line: not yet, nearly, yes.

I can write one energy equation with the work done against resistance in it.	○ ○ ○
I can find a resistance, a distance or a speed on a rough slope, going up and coming back.	○ ○ ○
I can find the work against a resistance along a curved path as force times arc length.	○ ○ ○
I can say when suvat cannot be used and judge a model of resistance.	○ ○ ○

© 2026 Mathswariz. All rights reserved. Free for personal and classroom use. Not to be sold or republished.