A-LEVEL FURTHER MATHS (OCR A) · FURTHER MECHANICS · CHAPTER 4: MOTION IN A CIRCLE · A* EXAM PRACTICE

Hints online, answers free with an account:
mathswariz.uk/worksheets/ocr-further-maths-mechanics-chapter-4-a-star/

Motion in a circle: A* questions

81 marks

Date

© 2026 Mathswariz. All rights reserved. Free for personal and classroom use. Not to be sold or republished.

X A* exam questions

A to A*

Extended OCR-style questions. Show every step. The hints are at the end of the sheet. Use one at a time.

X1 A smooth circular hoop has centre O and radius $0.25\ \text{m}$. The hoop is in a vertical plane and turns about its vertical diameter with constant angular speed $\omega\ \text{rad}\,\text{s}^{-1}$. A small bead P of mass $0.15\ \text{kg}$ is threaded on the hoop. The bead stays at rest relative to the hoop at a point below O, but not at the lowest point of the hoop. Given that $\omega = 7$, find the angle between OP and the downward vertical, and the magnitude of the normal contact force on the bead. Find also the value of ω below which the bead can only stay at rest relative to the hoop at the lowest point. [8 marks]

Answer angle $= \ldots^\circ$, force $= \ldots\ \text{N}$, $\omega = \ldots$

© 2026 Mathswariz. All rights reserved. Free for personal and classroom use. Not to be sold or republished.

X2 In this question you must show detailed reasoning. A particle P of mass $0.6\ \mathrm{kg}$ is attached to one end of a light inextensible string of length $2.7\ \mathrm{m}$. The other end of the string is attached to a fixed point O. P is held with the string taut, making an angle α with the downward vertical, where $\cos\alpha = \frac{9}{16}$, and is released from rest. In the motion that follows the string makes an angle θ with the downward vertical, and the speed of P is $v\ \mathrm{m\,s^{-1}}$. At a certain instant, $v = 4.2\cos\theta$. Find v at this instant and the tension in the string at this instant. Find also the greatest tension in the string during the motion. [10 marks]

Answer $v = \ldots$, tension $= \ldots\ \mathrm{N}$, greatest tension $= \ldots\ \mathrm{N}$

© 2026 Mathswariz. All rights reserved. Free for personal and classroom use. Not to be sold or republished.

X3 A fixed point A is on a smooth vertical rod. A small smooth ring R of mass $0.2\ \mathrm{kg}$ is threaded on the rod and rests on a fixed collar, $0.63\ \mathrm{m}$ vertically below A. A particle P of mass $0.5\ \mathrm{kg}$ is joined to A by a light inextensible string of length $0.6\ \mathrm{m}$ and to R by a light inextensible string of length $0.39\ \mathrm{m}$. The system turns about the rod, and P moves in a horizontal circle with constant angular speed $\omega\ \mathrm{rad\,s^{-1}}$ while R stays on the collar.

(a) Find the tension in the string PR in terms of ω, while both strings are taut. [4 marks]

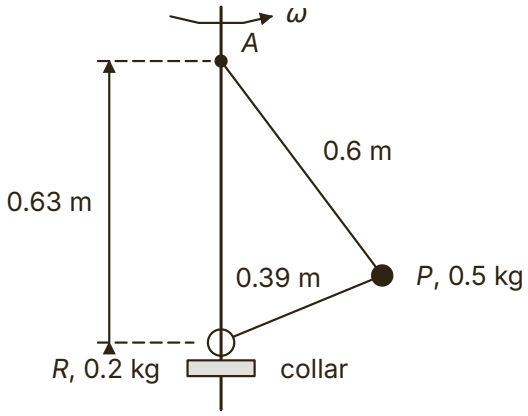

Answer $T = \ldots$

(b) Find the set of values of ω for which the string PR is taut and R stays on the collar. [4 marks]

Answer $\cdots \leqslant \omega \leqslant \ldots$

© 2026 Mathswariz. All rights reserved. Free for personal and classroom use. Not to be sold or republished.

(c) Hence find the greatest tension in the string AP while R stays on the collar. [3 marks]

Answer ... N

Total for X3: 11 marks

X4 A particle P of mass $0.35\ \mathrm{kg}$ hangs at rest from a fixed point O on a light inextensible string of length $0.9\ \mathrm{m}$. P is given a horizontal impulse of magnitude $I\ \mathrm{N\,s}$ and moves in a vertical circle with centre O.

(a) Find the least value of I for which P makes complete circles. [3 marks]

Answer $I = \ldots$

© 2026 Mathswariz. All rights reserved. Free for personal and classroom use. Not to be sold or republished.

(b) The string is replaced by a light rod of the same length, freely pivoted at O. Find the least value of I for which P makes complete circles, and explain why it is less than your answer to part (a). [2 marks]

Answer $I = \ldots$

(c) For the string, show that whenever P makes complete circles the tension at the lowest point is greater than the tension at the highest point by $6 \times 0.35g$. [4 marks]

© 2026 Mathswariz. All rights reserved. Free for personal and classroom use. Not to be sold or republished.

(d) The string breaks if the tension in it is more than $30\ \mathrm{N}$. Find the set of values of I for which P makes complete circles without the string breaking. [3 marks]

Answer $\cdots \leqslant I \leqslant \ldots$

Total for X4: 12 marks

X5 A particle P of mass $0.45\ \mathrm{kg}$ is attached to one end of a light inextensible string of length $0.75\ \mathrm{m}$. The other end is attached to a fixed point O, which is $2.25\ \mathrm{m}$ vertically above a point F on a horizontal floor. P moves in a horizontal circle with constant speed, with the string at an angle θ to the downward vertical, where $\cos\theta = 0.6$.

(a) Find the tension in the string and the speed of P. [4 marks]

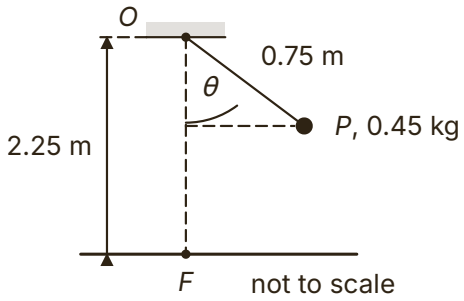

Answer $T = \ldots\ \mathrm{N}$, speed $= \ldots\ \mathrm{m\,s^{-1}}$

© 2026 Mathswariz. All rights reserved. Free for personal and classroom use. Not to be sold or republished.

(b) The string breaks. By considering energy, find the speed with which P hits the floor. [3 marks]

Answer ... $\mathrm{m\,s^{-1}}$

(c) Find the distance from F of the point where P hits the floor. [4 marks]

Answer ... m

(d) Kai says: "When the string breaks, P flies straight outwards, away from the centre of the circle, so it lands $0.6 + 1.70 = 2.30\ \mathrm{m}$ from F." Explain what is wrong with Kai's statement. [2 marks]

Total for X5: 13 marks

© 2026 Mathswariz. All rights reserved. Free for personal and classroom use. Not to be sold or republished.

X6 A bend on a road is an arc of a horizontal circle of radius $60\ \mathrm{m}$. The road is banked at an angle α to the horizontal, where $\tan\alpha = \frac{3}{4}$. A car of mass $900\ \mathrm{kg}$ goes round the bend at constant speed. The car is modelled as a particle, with coefficient of friction 0.3 between the car and the road.

(a) Find the speed at which the car can go round the bend with no friction force acting on it. [2 marks]

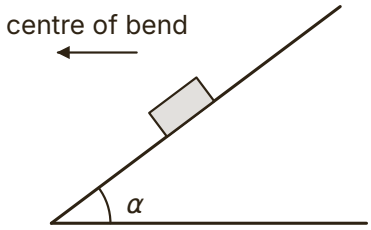

Answer ... $\mathrm{m\,s^{-1}}$

(b) Find the greatest speed at which the car can go round the bend without sliding, and the normal contact force on the car at this speed. [5 marks]

Answer speed $=$ ... $\mathrm{m\,s^{-1}}$, force $=$ ... N

© 2026 Mathswariz. All rights reserved. Free for personal and classroom use. Not to be sold or republished.

(c) Find the least speed at which the car can go round the bend without sliding. [3 marks]

Answer ... $\mathrm{m\,s^{-1}}$

(d) The same model, with the same coefficient of friction, is used for a bend banked at an angle β. Show that the model gives no greatest speed when $\tan\beta \geqslant \frac{10}{3}$, and comment on this. [3 marks]

Total for X6: 13 marks

© 2026 Mathswariz. All rights reserved. Free for personal and classroom use. Not to be sold or republished.

X7 A particle P of mass $0.36\ \text{kg}$ is attached to one end of a light inextensible string of length $0.7\ \text{m}$, whose other end is attached to a fixed point O. P moves in a horizontal circle below O with constant angular speed $\omega\ \text{rad}\,\text{s}^{-1}$, with the string at an angle θ to the downward vertical.

(a) Show that $\cos\theta = \dfrac{14}{\omega^2}$. [3 marks]

(b) Explain why P cannot move in this way when $\omega < \sqrt{14}$. Explain also why the string can never be horizontal, however large ω is. [3 marks]

© 2026 Mathswariz. All rights reserved. Free for personal and classroom use. Not to be sold or republished.

(c) The angular speed is slowly increased from $5\ \mathrm{rad\,s^{-1}}$ to $7\ \mathrm{rad\,s^{-1}}$. Find the total work that must be done on P. [6 marks]

Answer ... J

(d) Find the factor by which the tension in the string increases between $\omega = 5$ and $\omega = 7$, and the tension when $\omega = 7$. [2 marks]

Answer factor = ... , tension = ... N

Total for X7: 14 marks

© 2026 Mathswariz. All rights reserved. Free for personal and classroom use. Not to be sold or republished.

F How did it go?

Colour one circle on each line.

	Not yet	Nearly	Yes
I can resolve forces for horizontal circles, using the radius of the circle the particle moves in and exact trig values.	○	○	○
I can find a range of angular speeds or speeds from conditions such as a string staying taut or a ring staying on a collar.	○	○	○
I can combine energy with the equation of motion along the radius in a vertical circle, rejecting impossible roots with a reason.	○	○	○
I can link circular motion with impulse, projectiles and work-energy, and explain limiting cases of a model.	○	○	○

© 2026 Mathswariz. All rights reserved. Free for personal and classroom use. Not to be sold or republished.

Hints

Use one hint at a time. Cover the ones below it with a sheet of paper.

X1

Hint 1 Draw the forces on the bead. The hoop is smooth, so the normal contact force points towards O.

Hint 2 The bead moves in a horizontal circle about the vertical diameter, not about O. Its radius is $0.25 \sin\theta$.

Hint 3 Resolve vertically and horizontally. In the horizontal equation, $\sin\theta$ appears on both sides; you may cancel it because the bead is not at the lowest point.

X2

Hint 1 Write the speed at angle θ by energy from the point of release. Use $\cos\alpha = \frac{9}{16}$ exactly.

Hint 2 Replace v by $4.2\cos\theta$ to get a quadratic in $\cos\theta$. Each root must be checked against what $\cos\theta$ can be.

Hint 3 For the tension, the string pulls towards O and a component of the weight pulls away from O. The speed is greatest at the lowest point.

X3

Hint 1 Use the three lengths to find where P is: it is at the same distance from the rod on both strings. Look for two right-angled triangles with whole-number sides.

Hint 2 Draw the forces on P and on R separately. Both strings pull P; PR pulls P downwards and outwards towards the rod.

Hint 3 A string is taut while its tension is at least 0. R leaves the collar when the upward pull of PR on it is more than its weight.

X4

Hint 1 An impulse changes the momentum: $I = 0.35u$, where u is the speed just after it. At the top of the circle the string is vertical and P is $1.8\ \text{m}$ higher.

Hint 2 For a string to stay taut, the tension at the top must be at least 0. That is not the same as the speed at the top being 0.

Hint 3 At the top the weight acts towards O; at the bottom it acts away from O. Use energy to link the two speeds before you subtract.

© 2026 Mathswariz. All rights reserved. Free for personal and classroom use. Not to be sold or republished.

X5

Hint 1 Resolve vertically first to find the tension. The radius of the circle is $0.75 \sin\theta$, not 0.75.

Hint 2 Find how high P is above the floor. An energy equation needs only the speed and the height, not the direction of motion.

Hint 3 When the string breaks, P is moving along the tangent to its circle. Draw the circle from above: the tangent and the radius meet at right angles.

X6

Hint 1 Draw the forces: the weight, the normal contact force perpendicular to the road, and friction along the road. The acceleration is horizontal, towards the centre of the bend.

Hint 2 Resolve vertically and horizontally, not along the slope. At the greatest speed the car is about to slide up the slope; at the least speed, down it.

Hint 3 For part (d), look at the vertical equation at the greatest speed with β in place of α. What happens when the bracket multiplying R is zero or negative?

X7

Hint 1 Resolve vertically and towards the centre of the circle. The radius of the circle is $0.7 \sin\theta$.

Hint 2 $\cos\theta$ can be at most 1. For a horizontal string, think about the vertical forces on P.

Hint 3 As ω increases, θ increases, so P rises as well as speeding up. The work done is the gain in kinetic energy plus the gain in potential energy.

© 2026 Mathswariz. All rights reserved. Free for personal and classroom use. Not to be sold or republished.